TECHNICAL REPORT 91-35

Storage of nuclear waste in long boreholes

Håkan Sandstedt[1], Curt Wichmann[1], Roland Pusch[2],
Lennart Börgesson[2], Bengt Lönnerberg[3]

[1] Tyréns
[2] Clay Technology AB
[3] ABB Atom

Augusti 1991

SVENSK KÄRNBRÄNSLEHANTERING AB
SWEDISH NUCLEAR FUEL AND WASTE MANAGEMENT CO

BOX 5864 S-102 48 STOCKHOLM

TEL 08-665 28 00 TELEX 13108 SKB S
TELEFAX 08-661 57 19

STORAGE OF NUCLEAR WASTE IN LONG BOREHOLES

Håkan Sandstedt[1], Curt Wichmann[1], Roland Pusch[2],
Lennart Börgesson[2], Bengt Lönnerberg[3]

1 Tyréns
2 Clay Technology AB
3 ABB Atom

August 1991

Information on SKB technical reports from 1977-1978 (TR 121), 1979 (TR 79-28), 1980 (TR 80-26), 1981 (TR 81-17), 1982 (TR 82-28), 1983 (TR 83-77), 1984 (TR 85-01), 1985 (TR 85-20), 1986 (TR 86-31), 1987 (TR 87-33), 1988 (TR 88-32), 1989 (TR 89-40) and 1990 (TR 90-46) is available through SKB.

STORAGE OF NUCLEAR WASTE IN LONG BOREHOLES

August 1991

ABSTRACT

This report constitutes a feasibility study for the storage of high level radioactive waste in long TBM drilled tunnels. The report will form the basis for a comparison with other concepts in future analysis of the isolation performance in a typical Swedish rock structure.

The suggested repository concept consists of three parallel, 4.5 km long, horizontal tunnels at a depth of 500 m constructed using TBM technology. The tunnel diameter will be about 2.4 m for deployment of canisters with a diameter of 1.6 m. The space between the canisters and rock will be totally sealed off by bentonite.

The study comprises the design of canisters, canister handling and deposition, near field design, near field sealing and behaviour, and technical design of the repository. The report also includes a tentative time schedule and cost estimate, incorporating the construction phase and deployment of canisters.

STORAGE OF NUCLEAR WASTE IN LONG DRILLED BOREHOLS

SUMMARY AND CONCLUSIONS

General

This report constitutes a feasibility study for the storage of high level radioactive waste in long TBM drilled tunnels. The tunnel diameter will be about 2.4 m for deployment of canisters with a diameter of 1.6 m. The space between the canisters and rock will be totally sealed off by bentonite.

The study comprises the design of canisters, canister handling and deposition, near field design, near field sealing and behaviour, and technical design of the repository. The report also includes a tentative time schedule as well as a cost estimate of underground construction, backfilling and sealing. The costs are compared with the costs for similar items in the KBS-3 concept. The report will form the basis for a comparison with other concepts in future analysis of the isolation performance in a typical Swedish rock structure.

The report has been written as a joint venture between ABB-ATOM, Clay Technology AB and Tyréns under the commission of SKB, Swedish Nuclear Fuel Waste Managment Co.

Near field design

Based on comprehensive temperature calculations with different geometries, heat effects and properties of the bentonite barrier a main concept has been suggested consisting of canisters with a diameter of 1.6 m deployed in a 2.4 m diameter tunnel. The canister is 5.9 m long and contains 24 BWR fuel elements with a total heat production of 2950 W. The surrounding barrier should consist of saturated bentonite blocks (λ= 1.5 W/m,k) where the slots between the blocks and rock will be filled with water or a bentonite slurry to ensure an early water saturation and a high average heat conductivity. The purpose of an initially saturated clay barrier is also to avoid convection and to achieve an early high water pressure in the bentonite in order to increase the longevity of the bentonite at high temperatures.

The maximum temperature in the clay barrier will be reached after about 10 years with a temperature of 100°C at the canister contact and 80°C at the rock contact assuming a virgin rock temperature of 15°C at a depth of 500 m.

With a barrier of unsaturated bentonite and empty slots the average heat conductivity will be reduced to λ = 0.75 W/m,k and the maximum temperature in the clay barrier will then increase to 120°C at the canister contact at a depth of 500 m. If the bentonite is mixed with 10 % very pure and finegrained graphite powder the thermal conductivity can be as high as λ = 3.0 W/m,k assuming conditions identical to those of the main concept. The maximum temperature in the bentonite barrier for the latter concept will be reduced to 90°C at a depth of 500 m.

24 BWR fuel elements can be stored in a 1.3 m diameter canister instead of a 1.6 m diameter canister as assumed for the main concept. With the same tunnel diameter of 2.4 m, the thickness of the bentonite barrier will increase from 0.4 to 0.55 m. With the same conditions for the bentonite barrier ($\lambda = 1.5$ W/m,k) as for the main concept, the maximum temperature will increase to 110 °C at the canister contact.

The short duration of the temperature peak makes it possible to consider a temperature higher than 100°C in the bentonite barrier for a short period of time. In order to optimize the design of the system with canister, bentonite barrier and tunnel, it is important to further evaluate the maximum permissible temperature in the bentonite barrier.

Canister design

The basic canister suggested consists of a cylinder with a 1.6 m diameter and a length of 5.9 m. It will be made of a pressureretaining, 161 mm thick steel body covered with a 60 mm layer of copper. The ends are spherical in order to provide the best possible pressure retaining form.

The canister can contain a total of 37 BWR fuel elements. However, the residual heat would in this case be too high, and the basic concept presented in this report is based on 24 BWR elements or 6 PWR and 6 BWR elements in one canister. The weight of this canister will be about 58 tons. Should the final storage design be based on 24 BWR fuel elements it would be possible to reduce the canister size to a diameter of 1.3 m.

Principal layout of the long drilled tunnel repository

The basic layout suggested consists of three 4,5 km long parallel tunnels located 100 m apart at a depth of 500 m, with an investigation tunnel approximately 100 m below the repository. It is proposed that the transport system down to the repository should consist of a steep TBM drilled tunnel with an inclination of 1:4 and a diameter of 5.0 m. The investigation tunnel will be an extension of the steep ramp. Vertical shafts will be needed for supplies such as ventilation air and electricity and as an exit for personnel.

The concept is basically designed for an off-shore location, and in order to facilitate geological investigations an investigation tunnel will be constructed below the repository. This will make it possible to conduct sub-surface geological investigations during the construction period. It will also be possible to drill boreholes during construction between the investigation tunnel and the deployment tunnels for electricity supply, drainage water, etc. The investigation tunnel could also be used for inspection during any required time frame.

All drainage water from the repository will be conveyed towards a main pumping station at a level of -600 m.

The purpose of this report is to analyze a repository consisting of long tunnels suitable for an off-shore location. It is, however, also possible to design a compact layout with drilled tunnels similar to the KBS-3 concept. A possible layout suggested in this report consists of 450 m long tunnels with a diameter of 2.4 m drilled with horizontal raise boring techniques. The repository will cover an area of about 1000 x 1400 m. If requested it could also be constructed with smaller diameter boreholes.

Geology and strategy for site investigation

The repository area should be located in uniform rock mass with good properties for storage and tunneling. No major fault zones, crushed rock-zones or sections with high fissuring shall cross the area, and the hydraulic conductivity of the rock mass should be low. With the flexibility of a layout with long tunnels, it will be possible to avoid troublesome zones and to locate the repository tunnels to a favourable rockmass. If a major fault zone were to be crossed, the long tunnels could be extended and any required part of the tunnel around the zone could be sealed off and not be used for storage of radioactive waste.

The necessary geological surface investigations needed for the localization of a repository consisting of long tunnels will not differ in principle from what has already been used within the KBS-project. The layout based on long tunnels off-shore will, however, influence the strategy for site selection and the geological investigation programme. As normal surface investigations are more difficult to conduct, more information will be gained from geophysical measurements.

In order to find a suitable location, a step-by-step procedure is suggested where the ambition in each step will be dependent on achievable results and economic considerations. The basic philosophy is to carry out as many of the geological investigations as possible during the construction period and to adapt the final layout to the rock conditions found sub-surface. A presentation is given below of a suggested investigation strategy where each step is finished by an evaluation of the established expectation model. The investigation programme for the next step should also be revised on the basis of the results achieved .

Investigations	Goal
Surface investigation type KBS-3 including an off-shore seismic investigation.	Detailed layout of the ramp down to the repository level and a preliminary layout of the repository.
Investigations at the level for the repository and investigation tunnel	Detailed design of the investigation tunnel
Investigations from the investigation tunnel	Detailed layout of the deployment tunnels
Final geological investigation and documentation from all tunnels	Approval for deployment

Rock Mechanical Considerations

A brief rock mechanical evaluation based on a repository level of 1500 m shows that the repository could be constructed without risking the gross stability. However, high compressive stresses will increase the risk of rockburst, and a repository depth of between 500 and 1000 m is suggested. It is very important that the final level should be based on local conditions in a chosen area for the repository. Low, stable insitu rock stresses within a uniform rock mass are desirable. The rock mechanical estimates also show that the tunnels should be constructed parallel to the maximum horizontal stress, but it is also important to consider the main fracture directions in the rock mass.

Tunneling techniques

The report contains a review of different methods of transportation down to the repository level. Based on cost estimates, the time needed for construction and safety aspects, a combination of a steep ramp with an inclination of 1:4 and vertical shafts is suggested. The steep ramp (diameter 5 m) will be constructed by TBM techniques. The investigation tunnel will also be constructed with the same machine in the same operation.

TBM boring in a downward direction has been considered inconvenient. There are, however, examples available of its use in North America, and downward boring is planned to be carried out, with an inclination of 1:10 at Klippens hydropower station. Even though boring with TBM techniques in steep inclinations has not yet been carried out, discussions with manufacturers and contractors indicate that it should be possible to bore in inclinations down to 1:4. Bearing in mind the long time span before the storage facility will be constructed, it must be judged feasible to bore the ramp down to the repository using TBM technique at an inclination of 1:4.

The muck will be transported upwards by either a rail system or conveyor belt. A rail system will also be needed for the TBM machine and for transportation of personnel and equipment. The same rail transportation system should preferably also be designed to be used during the deployment period.

Tunneling at the repository level will be carried out by TBM boring. The concept presented in this report is based on a tunnel diameter of 2.4 m but the final size will be dependent on canister size and the required amount of bentonite around the canisters. Discussions with manufacturers show that it should be possible to design TBM machines for diameters down to 2.0 m.

All sub-surface works should be carried out by electrically-operated machines owing to their high efficiency and low exhaust gas emissions.

Near field sealing and behaviour

The concept of storage of nuclear waste in long drilled tunnels differs from the KBS-3 concept in three basic ways with regard to the near field behaviour:

- The temperature field caused by the radioactive waste causes no interference owing to a short temperature pulse and a fairly long distance between the deployment tunnels.

- The tunnels constructed by TBM techniques will cause less disturbance to the rock around the tunnel compared to normal drilling and blasting. The circular tunnel section also reduces the disturbance caused by stress release, and the risk of tensile stresses is small.

- The deployment tunnels are horizontal, and a large inflow of water might cause problems during deployment.

The bentonite barrier will consist of saturated bentonite with an initial density of 2.17 t/m^3. After deposition, the slots between the bentonite blocks and between the blocks and the rock will be filled with water or a water-bentonite slurry.

The inflow of water to the tunnel is important for the near field behaviour. A too high flow will jeopardize the emplacement of bentonite around the canister. The ambition during the design of the repository is to avoid large waterbearing fracture zones and to seal off the rock by various construction methods. Considering the deployment procedures a water inflow of about 250 litres per day along one 6 m canister can be accepted, which corresponds to a hydraulic conductivity of about 10^{-9} m/s. Larger inflows from a singel spot must be avoided.

With a watersaturated bentonite barrier, no inflow of water will take place after emplacement of the bentonite barrier except for a horizontal flow along the disturbed zone in the rock in immediate vicinity of the tunnel wall. After homogenization, the average density of the bentonite will be in the range of 2.0 ton/m^3 corresponding to a conductivity of between 10^{-14} and 10^{-12} m/s depending on the salt content in the pore water. The time needed for homogenization and the development of the swelling pressure, maximum 10 MPa, can be estimated to be 8-10 years. If a less conductivity in the disturbed zone is achieved the water pressure in the rock and the bentonite could be built up within a few month.

The water and gas conductivity of the near field rock around the repository tunnels is an important factor for the transport of corrodants and radionuclides. Impact on the near field rock is expected from four types of disturbance:

- Disturbance caused by fullface drilling of the tunnels.
- Disturbance caused by stress release resulting from excavation of the tunnel.
- Disturbance caused by internal tunnel pressures, i.e. the swelling pressure of the clay barrier.
- Disturbance caused by the heat production of the decaying waste fuel.

The disturbance from stress release can be quite high if some fractures in the fracture system are oriented almost parallel to the drift. In such a geometry the hydraulic conductivity parallel to the drift might increase up to 1000 times for a section close to the tunnel walls (0.3 m into the rock). If all fractures are oriented with an inclination of more than 15-20° to the axis of the drift, the disturbance is much less and the increase in hydraulic conductivity may be as low as a couple of times. The increase in hydraulic conductivity deeper into the rock than 0,3 m from the surface, is probably less than 5 times in any structure. The influence of the swelling pressure from the bentonite and the temperature increase is probably low compared to the influence of the stress release, since these processes rather tend to close the fractures than to open them.

The average permeability of the rock, especially in fracture zones and the disturbed zone surrounding the tunnel, is higher than that of the bentonite barrier. In order to minimize the near field water flow, wider fracture zones will be sealed off by highly compacted bentonite placed in a 1 metre deep slot cut into the tunnel wall and by grouting the zones with a suitably composed cement or clay based grout.

Thin, natural fracture zones will be sealed off by different grouting techniques. In order to reduce axial flow, bentonite block walls will be placed in zones with fractures and poor rock at regular intervals, for instance between each set of 3-6 canisters. The overall philosophy is to create a stagnant groundwater condition in the near field area.

Scientific studies on the longevity of the bentonite show that temperatures exceeding 120-130°C will create brittleness and a reduced ability to swell and self-heal, and also make the smectite particulary sensitive to conversion to non-expanding hydrous mica. Current knowledge therefore indicates that 120°C should be set as a maximum temperature level even for very short heating periods. A safe recommendation is therefore to aim at a maximum temperature of about 100°C in the bentonite. The longevity of the bentonite and the sealing of the near field rock is essential, and should therefore be further investigated. It should also be added that the repository should preferably be located in rock with a low content of potassium-bearing minerals such as feldspar microcline.

Transport and handling of canisters and bentonite blocks

Transportation from the surface down to the repository level will be carried out by a specially designed wagon running on the rail system already used during construction. At the trans-shipment area, an overhead crane will be used to lift the canisters from the bogie-platform over to a wagon designed to fit the circular form of the deployment tunnels.

In this study, one basic concept consisting of wagons on rails is suggested for transportation into the repository tunnels. The transport system consists of different wagons for the canister and bentonite blocks pushed by a truck, and a deposit wagon that is used when the canister is transferred from the transportation wagon into final position. The track has two rails, each one wide enough to allow the wagon wheels to move sidewise in the tunnelbends. In this way, the wagons can be made from one stable frame without bogies, which would require more space than is available. The wheels are springmounted, which permits a certain unevenness in the rails. It is assumed that the truck, which has a shield for protection against radiation from the canisters, will be manned by an operator. It is also possible for the truck to be remote-controlled.

The deployment procedure could be described in terms of three principal activities. First a bed of bentonite blocks is placed at the bottom of the tunnel, secondly the canister is placed on the bentonite bed and finally the remaining bentonite blocks are placed around the canister.

Time schedule for construction and deployment

A rough time schedule shows that it will take a total of 20 years, including construction and deployment, before the repository could be finally sealed off. In this time schedule, 2 years is reserved for geological investigations between the construction and deployment phase.

Cost considerations

A tentative cost estimate shows that the cost for underground construction and backfilling is about MSEK 2,400 which is substantially less than the corresponding cost for the KBS-3 concept.

In order to make a comparison with the KBS-3 concept (PLAN 91) data on the size of rock caverns, number of canisters, etc. are presented below:

	KBS-3	Long boreholes
Number of canisters	5,300	1,900
Total volume of excavated rock m^3	890,000	253,000
Volume of excavated rock in disposal tunnels m^3	-	60,000
Volume of excavated rock in disposal holes m^3	70,000	-
Compacted bentonite surrounding the canisters m^3	53,000	39,000

1. GENERAL

The KBS-3 concept design of a repository for spent nuclear fuel comprises a system of horizontal drifts in a compact layout with vertical deposition holes each containing one canister. An alternative design is a repository consisting of long TBM drilled deposition tunnels where the canisters, surrounded with bentonite, are deployed after each other. The layout of the repository and the length of the deployment tunnels will depend on construction considerations, canister handling and geological prerequisities. This new concept will minimize excavated rock volumes, and reduce the need for sealing below surface with a large potential for cost reductions.

This report constitutes a feasibility study for storage of high level radioactive waste in long TBM drilled tunnels. The study comprises design of canister, canister handling and deposition, near field design, near field sealing and behaviour, and technical design of the repository. The report also includes a tentative time schedule and cost estimate including construction and deployment of canisters. The report will form the basis for a comparison with the KBS-3 concept and a concept consisting of vertical, very deep boreholes (VDH) in future analysis of the isolation performance in a typical Swedish rock structure.

An important part of the study is a new design of a large canister with a diameter of 1.6 m for deployment in a circular tunnel of about 2.4 m. The large canister, will contain about three times more waste than the KBS-3 canister and it is important to study the temperature field around the canister in order to design the bentonite barrier. The report also includes a broad discussion about the near field sealing and behaviour.

When comparing the long tunnel concept with other alternatives, it is important to separate questions related to the near field performance and the long geographical extension of the repository. The concept presented is designed for an off-shore location, but a similar compact repository such as KBS-3 could also be designed with drilled tunnels. The advantages of an off-shore location include the fact that a very stable groundwater regime is obtained and very few landowners will be affected.

Compared to a compact repository, a long tunnel concept off-shore requires a very different approach with regard to geological investigations. Investigations from the surface will, of course, be more difficult and expensive, and the basic strategy will therefore be to conduct as many of the necessary geological investigations as possible sub-surface during the construction period. The final design of the repository should be based on information obtained during the construction period.

TBM boring techniques provide some obvious advantages compared to normal techniques of drilling and blasting when constructing tunnels. The bedrock closest to the tunnel will be less disturbed, and this is shown by the results of the Saltsjötunnel in Stockholm. The 7.5 km long tunnel was reinforced with only one rock bolt and very little shotcrete. The circular section of the tunnel is, of course, an advantage in this respect.

The technology for TBM boring in hard rock is now developing rapidly, and it has been proposed that nearly all long tunnels will be drilled in the future. New and better techniques will decrease the costs. However, similar development is not expected to take place in the more traditional methods of tunnel construction.

The report has been written as a joint venture between ABB-ATOM, Clay Technology AB and TYRÉNS under the commission of SKB, Swedish Nuclear Fuel Waste Management Co. The work has been carried out in close cooperation with Anders Bergström and Christer Svemar from SKB.

The responsibilities have been divided as follows between the authors:

ABB-ATOM	- Canister design - Transportation and handling of canisters and bentonite blocks
Clay Technology AB	- Near field design - Near field sealing and behaviour
TYRÉNS	- Layout of the repository - Geology and strategy for site investigations - Rock mechanical considerations - Tunneling technology - Time schedule and cost considerations

2 NEAR FIELD DESIGN

2.1 General

One basic idea of the concept Very Long Holes (VLH) is to locate the tunnels at such a distance from each other that the interactive temperature field is of secondary importance. The geometry and heat conductivity of the near field components will thus be crucial for the temperature development and the number of fuel elements that can be stored in each canister.

The main and alternative concepts presented in this chapter are based on many calculations and considerations. Since the bentonite barrier surrounding the canisters is sensitive to high temperatures, the purpose of this study has been to design the near field in order to optimize the number of fuel elements in each canister without destroying the function of the bentonite barrier.

2.1 Temperature prerequisities

Several temperature calculations have been performed with varying geometry, heat effects and properties of the bentonite barrier. The finite element program ENERGY from the CHALMFEM package has been used for the calculations. The element mesh is shown in Figure 2-1, and the dimensions of the main concept are marked in the figure. The mesh is axi-symmetric and the lateral boundaries modelled as symmetry planes, meaning that the geometry is reflected in all boundaries except the lower one. Only a few metres of the rock mass are shown since the distance to the rock boundary is 100 m.

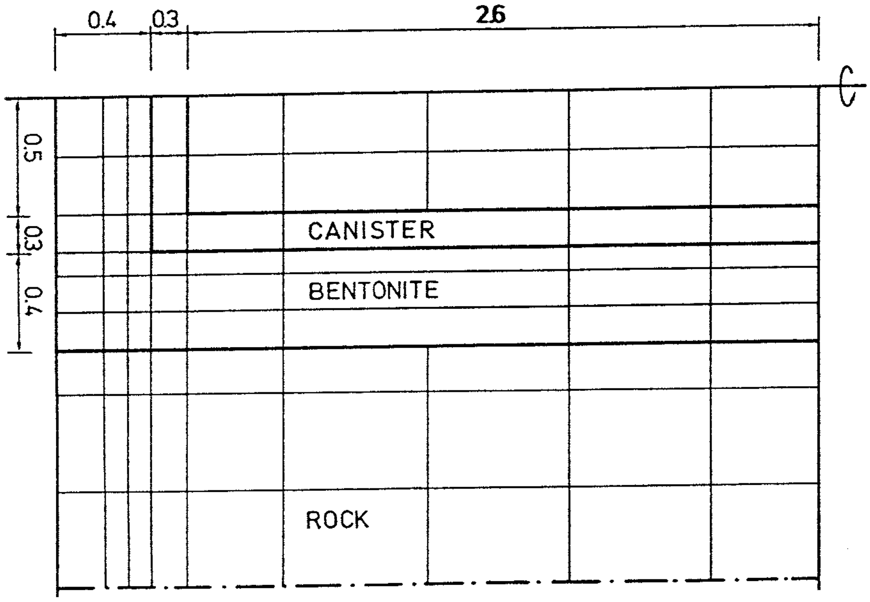

Figure 2-1 Part of the axi-symmetric element mesh used at the heat calculations. The dimensions marked with figures refer to one of many calculations.

The heat production from the fuel decrease in time at the rate shown in Table 2-1:

Table 2-1. Decrease in heat production in time

Time (years)	Factor
40	1.00
42	0.9678
44	0.9369
46	0.9075
48	0.8792
50	0.8522
55	0.7889
60	0.7312
70	0.6320
80	0.5470
90	0.4700

The fuel is assumed to be stored after 40 years with a heat production of 122.9 W per element or 2950 W for a canister containing 24 elements.

The basic thermal properties assumed in the calculations are presented in Table 2-2. No effort has been made to simulate the temperatures inside the canister.

Table 2-2. Basic thermal properties

	λ	c	ρ
	W/m,K	Ws/kg,K	kg/m
Inside canister	380	1.0	8930
Canister	380	390	8930
Bentonite barrier (a)	0.75	1100	2000
Bentonite barrier (b)	1.25	1400	2000
Bentonite barrier (c)	1.50	1600	2000
Bentonite barrier (d)	3.00	1600	2000
Rock	3.0	740	2700

The bentonite properties represent different conditions:

(a) Initial conditions with unsaturated bentonite blocks and an air-filled slot between the bentonite and the rock.

(b) and (c) Saturated conditions.

(d) A mixture of 10% graphite and 90% bentonite in saturated conditions.

Several calculations have been made incorporating variations in the following parameters:

A. Number of fuel elements in the canister
B. Diameter of the canister
C. Thickness of the bentonite barrier
D. Distance between canisters
E. Heat conductivity of the bentonite barrier
F. Flanges attached to the canister

The calculations will result in one basic concept and 3 alternatives.

2.2 Basic thermal considerations

Unless otherwise stated, the initial conditions with an unsaturated bentonite barrier having λ= 0.75 W/m,K are assumed in all calculations.

Influence of canister diameter

The diameter of the canister is in these calculations assumed to be 2.3, 2.8 and 3.3 m, respectively, while the bentonite barrier is constantly 0.4 m. The assumed canister containes 45 BWR fuel elements with a 0.8 meter spacing between the canisters. Figure 2-2 presents the temperature increase as a function of the distance from the centre of the canister at the time when the temperature in the bentonite is at maximum which occurs after about 8 years in all calculations. The figure shows that the temperature increase is unacceptably high. It also shows that an increased radius of 10% will decrease the maximum temperature by about 4%.

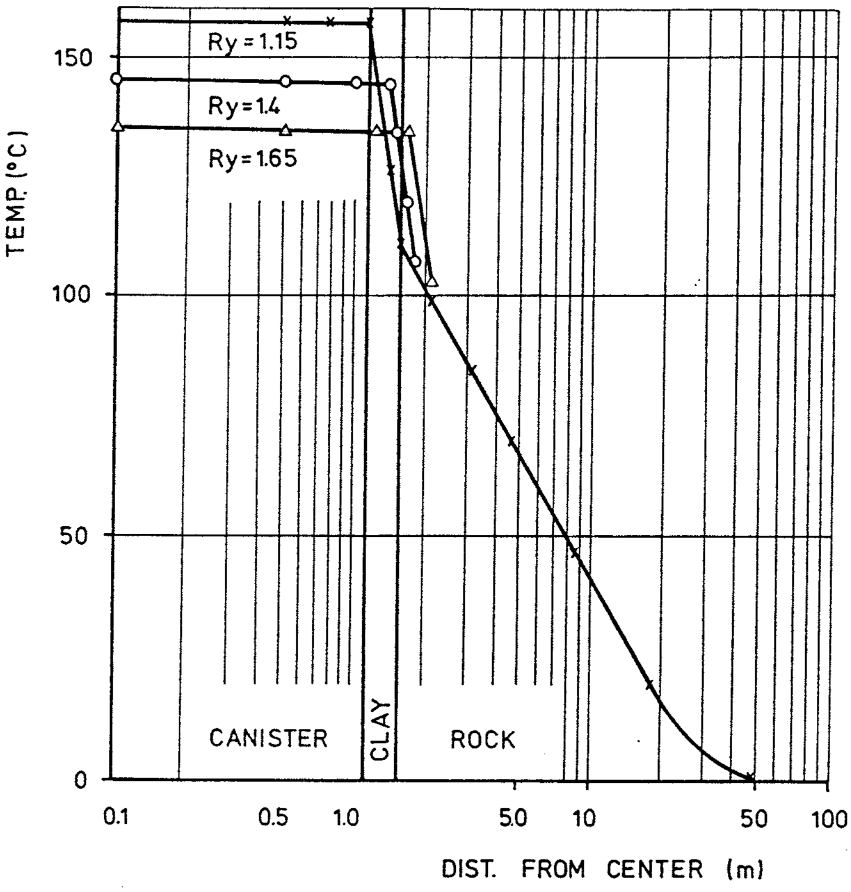

Figure 2-2 Increase in temperature as a function of the distance from the centre of the canister at maximum temperature. The outer radius Ry of the canister is varied.

Influence of the thickness of the bentonite barrier

Results from three calculations are shown in Figure 2-3 for thicknesses between 0.4 and 0.8 meters. The figure shows that an increased clay thickness (with constant canister diameter) of 10% will increase the temperature near the canister by 2-3% while the temperature at the rock surface will decrease by less than 1%. This shows that very little is gained by increasing the clay thickness since the majority of the enlarged clay barrier will be exposed to higher temperatures.

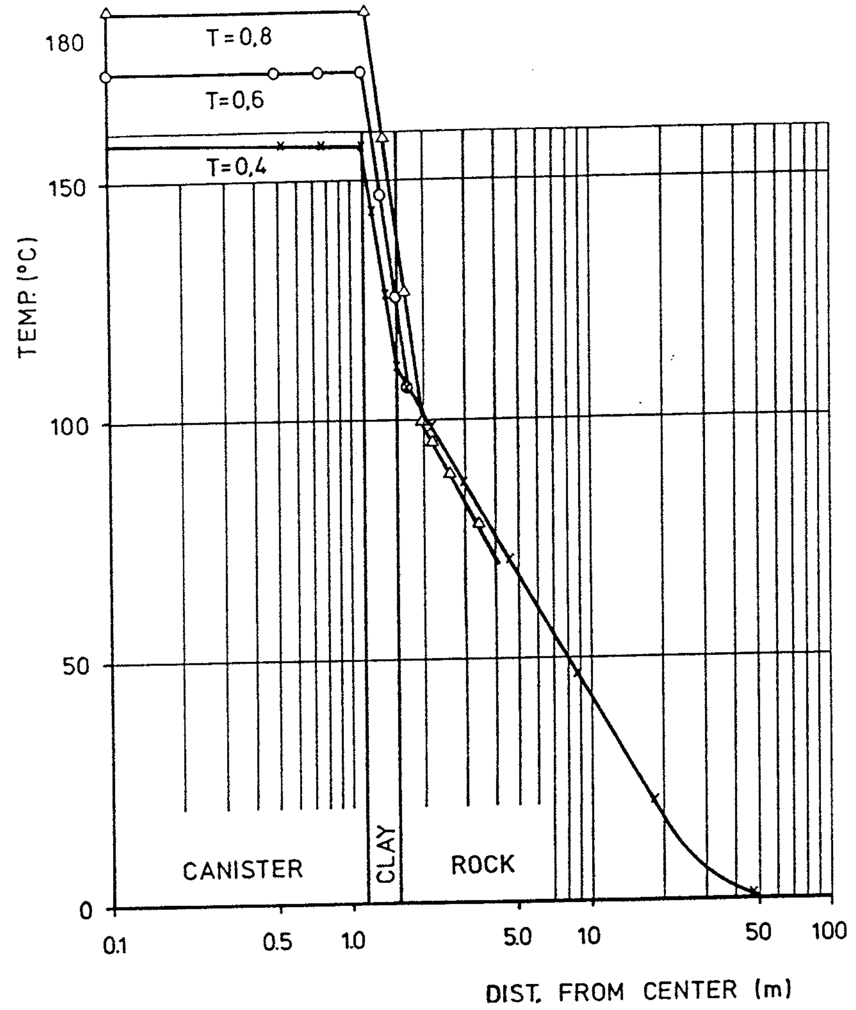

Figure 2-3 Increase in temperature as a function of the distance from the centre of the canister at maximum canister temperature. The clay thickness T is varied.

Influence of the number of fuel elements in the canisters

45 BWR fuel elements in each canister are obviously too many since the maximum temperatures including the original temperature will be about 170°C in spite of the large canister diameter. Most of the subsequent calculations are therefore made assuming 24 BWR elements in a canister with a diameter of 1.6 m and a tunnel having a diameter of 2.4 m. Figure 2-4 shows some calculations with these assumptions. The distance between the canisters D and the heat conductivity of the bentonite are varied in these calculations.

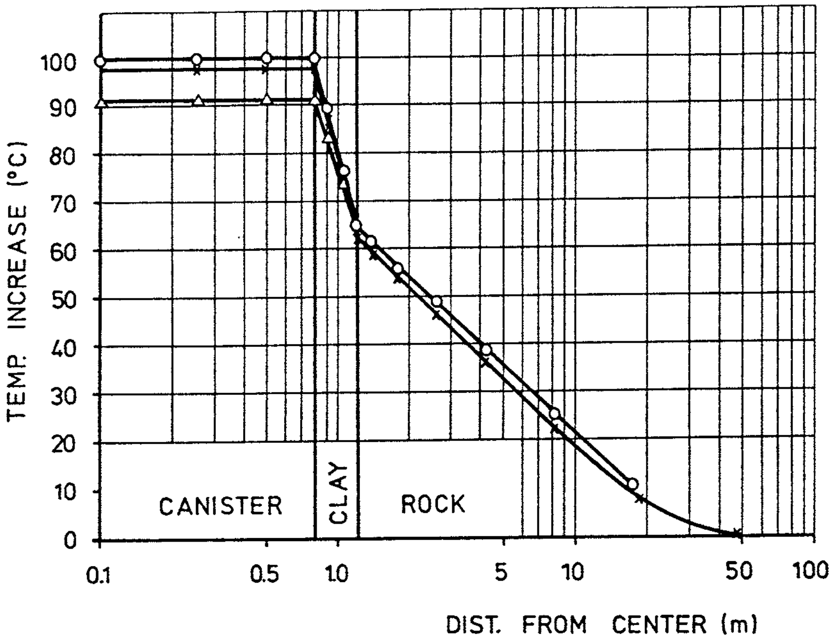

Figure 2-4 Increase in temperature as a function of the distance from the centre of the canister at maxium canister temperature. The distance between the canisters D and the heat conductivity of the clay barrier λ are varied.

o D=0.8 m. λ=0.75 W/m,K
Δ D=0.8 m. λ=1.0 W/m,K
x D=0 m. λ=1.0 W/m,K

Influence of the distance between canisters

An increased distance D between the canisters will, of course, lower the temperature. Figure 2-5 shows the results of calculations where D has been varied from 0 to 3 metres. Since the relation is non-linear and the highest temperature at the canister/bentonite interface is in the centre of the canister, the most economical solution is probably to reduce the canister spacing as much as possible or to insert a heat-conductive component between them.

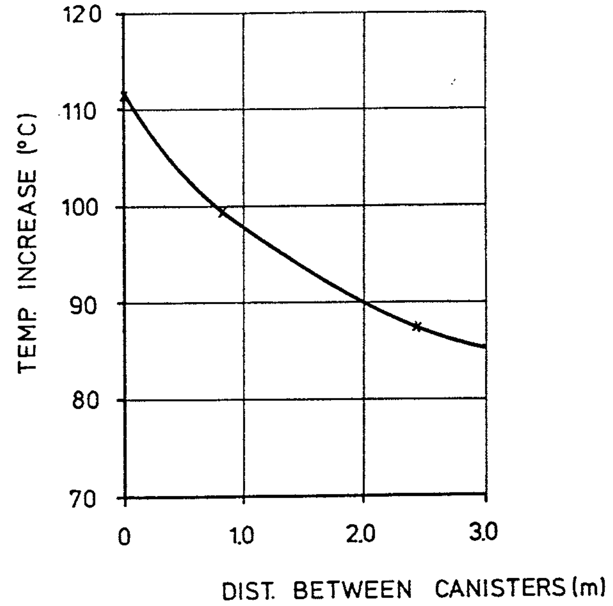

Figure 2-5 The maximum increase in temperature of the bentonite barrier as a function of the distance between canisters.

Influence of the heat conductivity of the bentonite barrier

The initial heat conductivity λ of the unsaturated bentonite barrier, including the 5 cm air gap at the rock surface, is estimated to be about 0.75 W/m,K. If the conductivity can be increased by e.g. adding powdered graphite to the bentonite or by increasing the initial water content or by filling the gap with water or bentonite slurry, more fuel elements can be placed in the canister. Another possibility is to put flanges on the canisters. Some calculations, where different λ, different D and flanges with different thickness have been assumed, are shown in Figure 2-6. The figure shows the maximum temperature at the canister/bentonite interface as a function of time. The flanges are assumed to be radially oriented and to go across the whole bentonite barrier at a distance of 1.0 m. The following conclusions can be drawn from Figure 2-6:

- The maximum temperature occurs after 2000-3500 days.

- An increase in thermal conductivity from λ=0.75 to λ=1.0 will decrease the temperature by 10°C

- The same decrease in temperature will be achieved by an increase in distance D from 0.8 to about 2 m.

- Flanges will decrease the temperature by about 15°C.

- The thickness of the flanges is of minor importance.

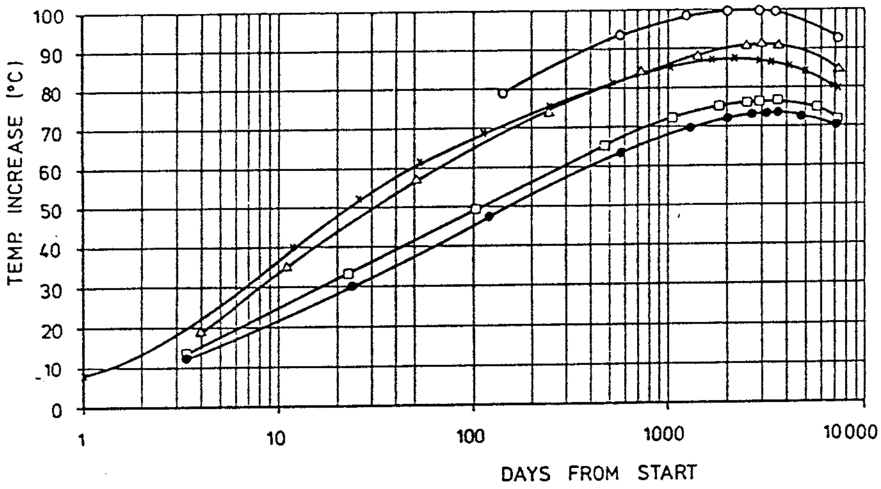

Figure 2-6 Increase in maximum temperature of the clay barrier as a function of the time after storage. Different heat conductivity λ, canister distance D and thickness δ of flanges are assumed.

o λ=0.75 W/m,K; D=0.8 m
Δ λ=1.0 W/m,K; D=0.8 m
x λ=0.75 W/m,K; D=2.4 m
λ=1.0 W/m,K; D=0.8 m; flanges with δ=5 mm
• λ=1.0 W/m,K; D=0.8 m; flanges with δ=10 mm

Influence radius

Figure 2-7 shows the radial temperature distribution at different times from the calculation with λ=0.75 and 26 BWR fuel elements. The influence radius after 9000 days (25 years) is 100 m. By that time the temperature at the canister interface will have decreased by approximately 15°C, which means that if parallel tunnels are constructed the distance between them does not need to exceed 100 m.

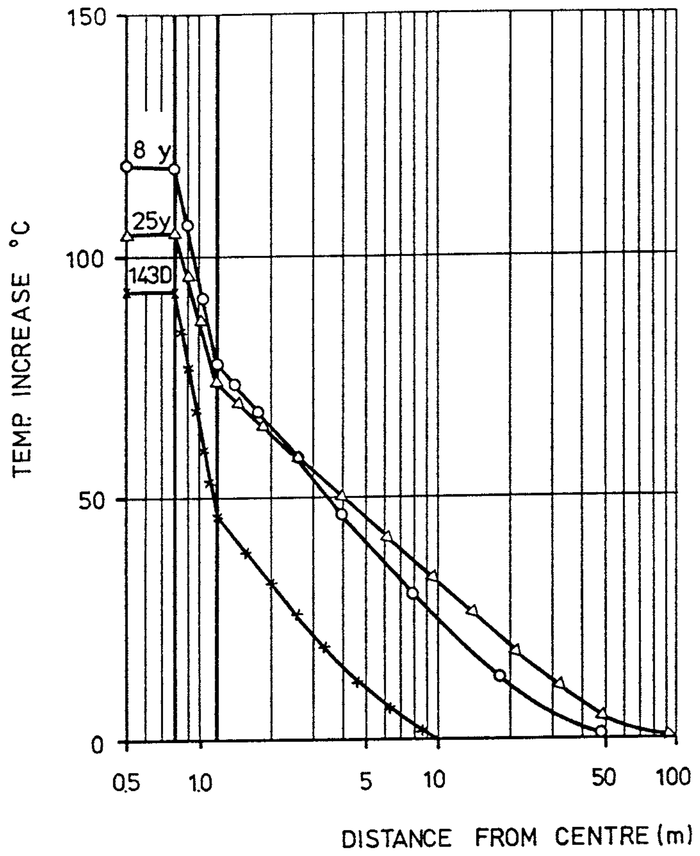

Figure 2-7 Temperature increase as a function of the distance from the canister centre after 143 days, 8 years and 25 years. The curves refer to the case with 26 fuel elements and no distance between canisters.

Long time behaviour

Temperature calculations over 50 years presented i Figure 2-8 show that by the end of this period the temperature will have decreased by more than 30% from the maximum.

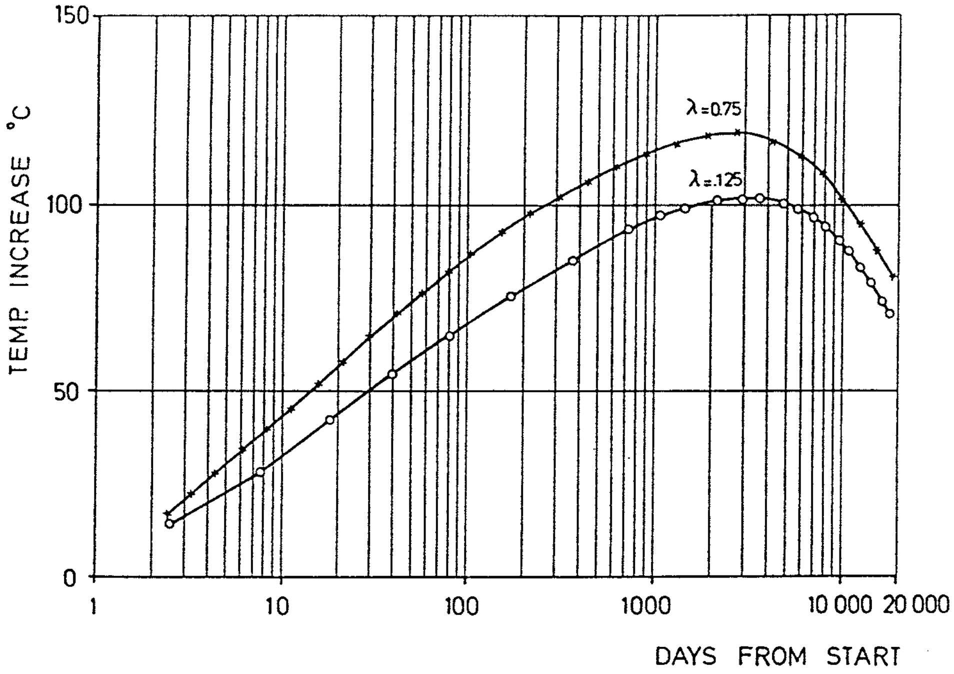

Figure 2-8 Increase in maximum clay temperature as a function of the time after storage. The curves refer to the case with 26 BWR fuel elements and no distance between canisters.

Conclusions from the temperature calculations

The calculations show that there is no point in increasing either the tunnel diameter or the canister diameter to more than 2.4 m and 1.6 m respectively. The calculations also show that it is more efficient to store the canisters close together and preferably in contact with each other. If the total maximum temperature is to be limited to 90°C, such a concept would imply that less than about 18 BWR fuel elements could be stored in one canister.

The calculations also show that the temperature has a very well-defined peak 8-10 years after deployment. If a higher temperature could be permitted over a period of 10 years, about 9 % more fuel could be stored in the canister. If a higher temperature can be accepted for 30 to 50 years, some 22 % to 40 % more fuel could be stored in each canister.

If the heat conductivity of the bentonite could be increased from the assumed $\lambda=0.75$ W/m,K to $\lambda=1.25$ W/m,K it would be possible to increase the number of fuel elements by about 20 %. A combination of high conductivity and temperatures above 100°C for some years would mean that about 30 elements could be stored in one canister.

If flanges were to be attached to the canister, the effect would be similar to the effect of an increased heat conductivity of the bentonite. The temperature would be decreased by 10 to 20 %, depending on the distance between the flanges.

The basic calculations have resulted in a proposal for one main concept and three alternatives. These concepts are based on a tunnel of 2.4 m while the composition of the bentonite barrier is varied in three of the concepts and the diameter of the canister is varied in the fourth.

2.3 Main concept with saturated buffer

The important parameters in the design of the main concept are:

- Canister diameter: 1.6 m
- Tunnel diameter: 2.4 m
- Number of elements stored in the canister: 24
- Canister length: 5.9 m
- Distance between canisters: 0.1 m

The concept of VLH, which excludes temperature overlapping at maximum temperature, increases the importance of the heat conductivity of the bentonite barrier. Since the maximum temperature will occur at about 8 years after storage, a high initial heat conductivity of the package is especially important.

The short duration of the temperature pulse (about 15% of the peak temperature within 25 years and about 30% of the peak temperature within 50 years) makes it possible to consider temperatures of more than 100°C in the bentonite. To avoid convection around the canister, and its resulting negative effects on the bentonite, it would be preferable to have the system water saturated, which further emphasizes the importance of starting with a highly saturated bentonite barrier. If the near field rock is not too permeable in the axial direction of the tunnel, there will be an early high water pressure in the rock and bentonite, which will be additionally favourable to the bentonite.

Thus there are several reasons for starting with a highly saturated barrier. Preliminary tests have shown that it is possible to compact bentonite with a water content which has been artificially increased from the natural water content w=10% to w=21%. By applying vacuum and a compaction pressure of 100 MPa to such a sample it was possible to reach a density of 2.08 t/m and a degree of saturation of S =95 %, which should be sufficient to fulfil the required function of the barrier.

Saturated bentonite blocks should thus be used in the main concept. The slots should be filled with bentonite slurry to ensure an early saturation and a high average heat conductivity. The slurry will initially have a lower heat conductivity than the blocks due to the low density. The homogenization will, however, ensure that the heat conductivity is about the same in the whole barrier when the maximum temperature is reached after 8-10 years. The final value will be λ=1.25-1.5 W/m,K.

Figure 2-9 shows the results of a temperature calculation with λ=1.5 W/m,K. The maximum temperature increase, 89°C, is reached after 10 years giving a temperature variation in the clay barrier of between 100 and 80°C at a depth of 500 m. The influence radius is at this time 50 m. After 50 years, the temperature increase will have been reduced by 26°C to 63°C.

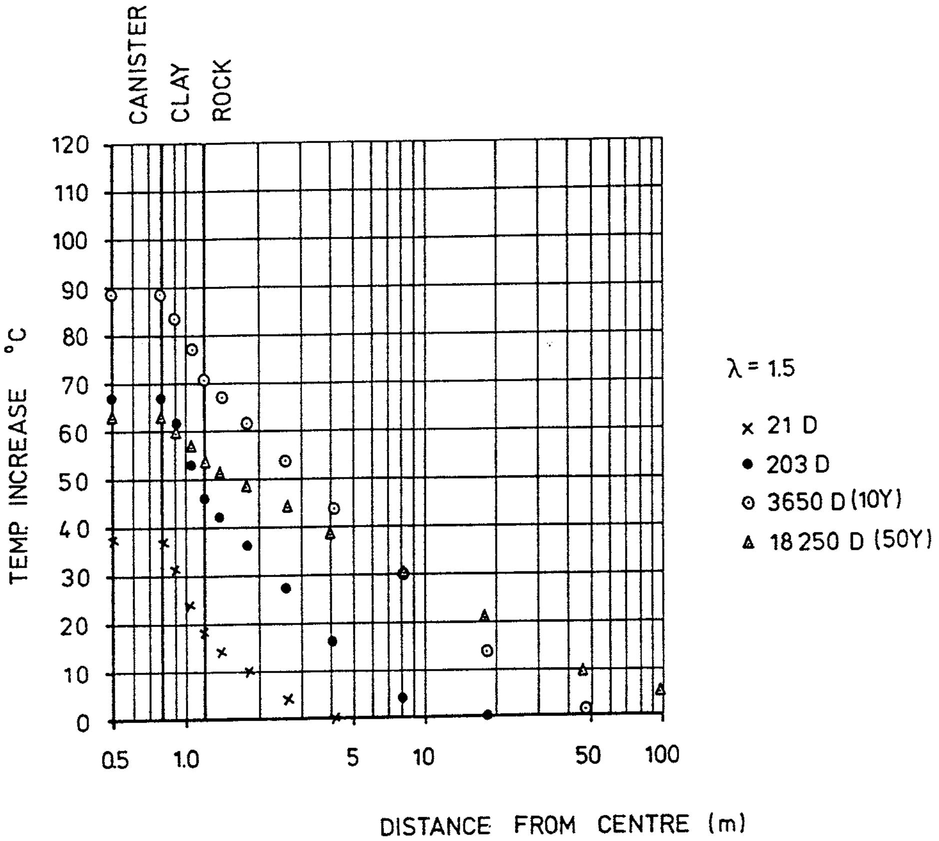

Figure 2-9 Temperature increase as a function of the distance from the centre of the canister at different times for the main concept with water saturated buffer

2.4 Alternative concepts

Unsaturated buffer

The first alternative concept will correspond to the KBS-3 concept. The bentonite, is compacted to a 50 % degree of saturation and the slots in the bentonite barrier, after deposition, are not filled with water or bentonite slurry. The average heat conductivity will under these circumstances be about λ=0.75 W/m, K. The geometry is identical to the main concept.

Figure 2-10 shows the temperature increase in the repository at four different times. The maximum temperature increase of 107°C is reached after about 10 years and the temperature varies in the clay barrier between 120 and 85°C at a depth of 500 metres.

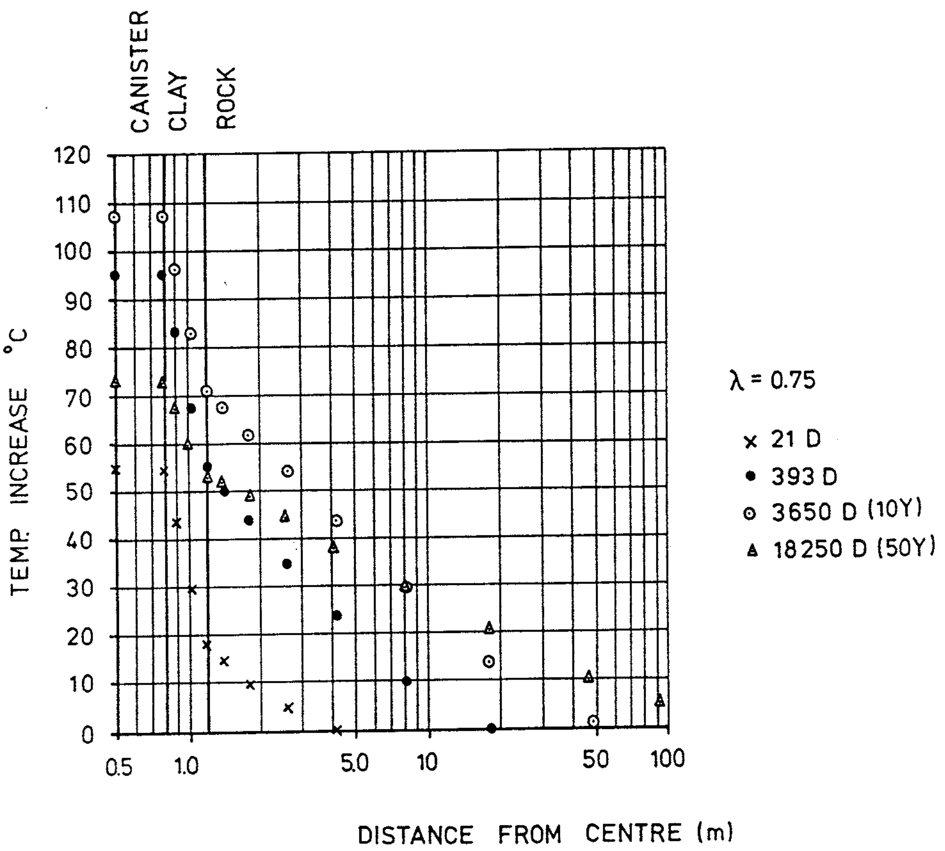

Figure 2-10 Temperature increase as a function of the distance from the centre of the canister at different times for the concept with an unsaturated buffer.

Graphite mixed bentonite

If 10% very pure and fine grained graphite powder is mixed into the bentonite the thermal conductivity can be as high as λ=3.0 W/m, K if the same technique with water saturation of the blocks and slots is used as in the main concept. Assuming identical conditions as the main concept and a saturated bentonite barrier, λ = 3.0 W/m, K the temperature situation in the repository will be as shown in Figure 2-11. The maximum temperature increase, 80°C, will occur after about 10 years and the temperature variation in the bentonite will then be between 90 and 80°C at a depth of 500 meters.

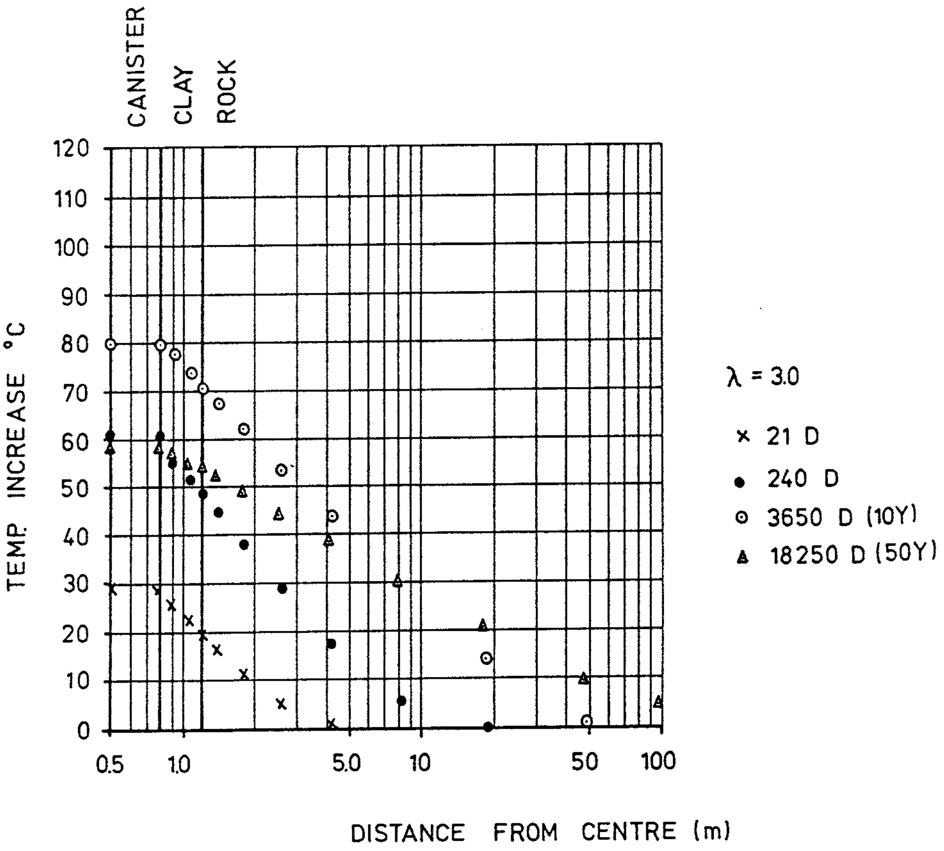

Figure 2-11 Temperature increase as a function of the distance from the centre of the canister at different times for the concept with graphite mixed buffer

Small canister

24 BWR fuel elements can be contained in a smaller canister than the one assumed for the main concept. The third alternative presented is to use a canister with a diameter of 1.3 m instead of 1.6 m. Since the tunnel diameter is kept at 2.4 m, the bentonite barrier will thus be increased from 0.4 to 0.55 m.

With the same conditions as the main concept (λ=1.5 W/m,K) the temperature increase will be about 99°C and the temperature distribution at different times is as shown in Figure 2-12. At the depth of 500 m, the maximum temperature variation in the clay barrier will be between 110 and 80°C. The canister is in this calculation assumed to have the same length, 5.9 m, as in the other concepts. If the canister is shortened to 5.6 m, which is possible due to the smaller diameter, the temperature will increase by 5 %.

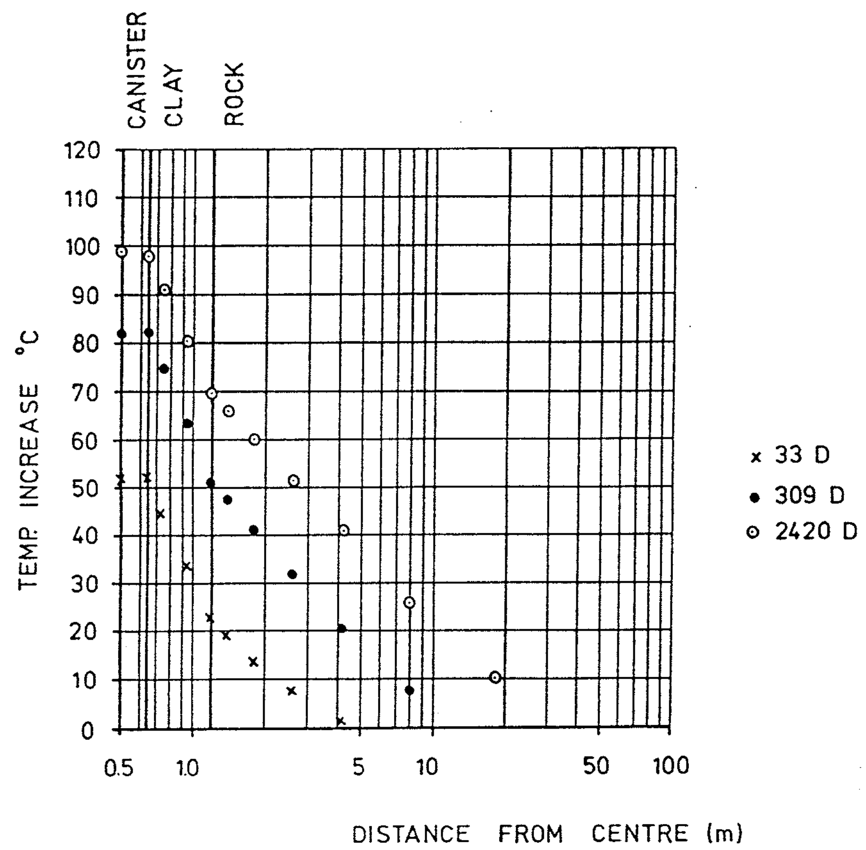

Figure 2-12 Temperature increase as a function of the distance from the centre of the canister at different times for the small canister concept

2.5 Conclusions

The temperature calculations and practical considerations have yielded four concepts for the geometrical design of the near field. In three of these concepts the geometry is the same, with diameters of 2.4 and 1.6 m of the tunnel and the canisters. However, the composition of the clay barrier is different. According to the main concept, the clay barrier will be made of water-saturated bentonite blocks and the slots between the blocks and the rock or the canister will be filled with water or bentonite slurry. The other two alternatives are either to use the same clay barrier construction as in KBS-3 with non-saturated blocks and slots, or to use bentonite mixed with graphite. In the non-saturated concept, the average thermal conductivity is λ=0.75 W/m,K, while it is increased to λ=1,5 W/m,K in the saturated concept and to λ=3.0 W/m,K in the graphite concept. The idea of having an initially saturated clay barrier is not only to increase the heat conductivity but also to avoid convection and to achieve an early high water pressure in the bentonite in order to increase the longevity of the bentonite at high temperatures.

Figure 2-13 shows development of the highest temperature in the clay in the three concepts and in the small canister concept. The same number of fuel elements yields a temperature difference of 30°C in these concepts and a key question is thus the maximum allowable temperature in the clay barrier during the short peak period. In order to make an optimization the maximum possible temperature increase is shown in Figure 2-14 as a function of the number of elements stored in one canister in the four concepts.

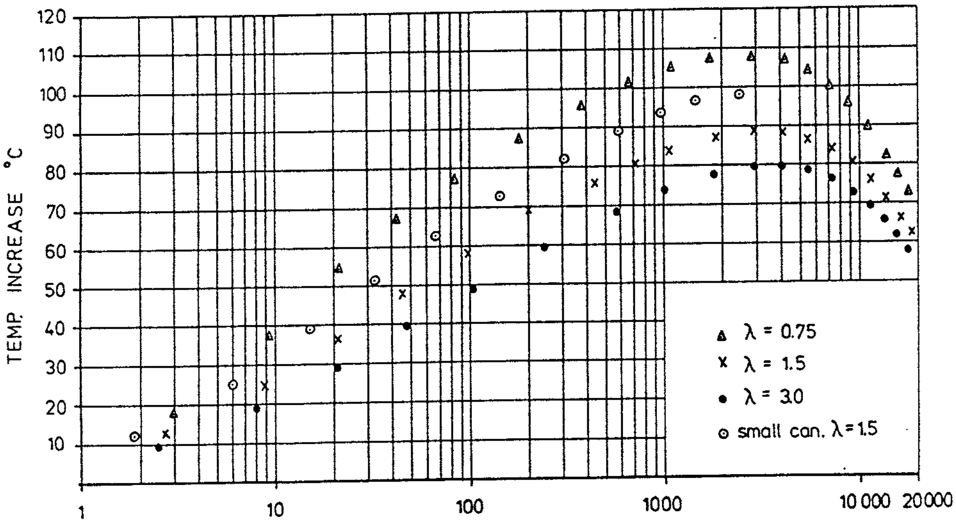

Figure 2-13 Increase in the maximum temperature in the clay as a function of the time after storage for the four different concepts

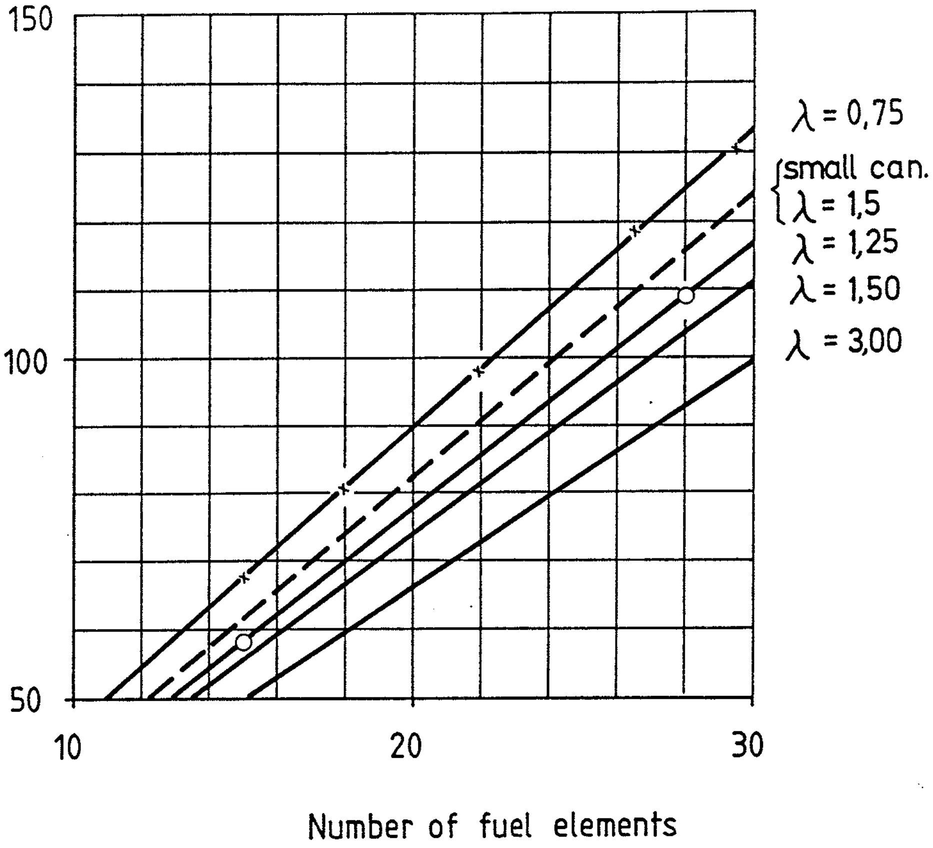

Figure 2-14 Maximum temperature increase in the canister as a function of the number of fuel elements

3. CANISTER DESIGN

The basic canister suggested is a cylinder with 1.6 m diameter and 5.9 m length. It will be made of a pressure retaining steel body covered with 60 mm copper. The ends are spherical in order to give the best pressure retaining form.

The inner diameter is 1.16 m which allows 37 BWR fuel elements to be stored. The residual heat is too high for this amount of fuel in the canister so the main suggested concept are planned for 24 BWR fuel elements or 6 PWR + 6 BWR. The barrier weight of this canister will be approx 58 tons.

There are several means to increase the heat conductivity of the surrounding bentonite which lowers its temperature. Therefore there is a realistic possibility that more fuel can be stored in the canister, which will reduce the number of canister and consequently the total costs of the deposition. Such perspectives should be further studied.

If the 24 BWR fuel elements should be the final decision of canister content, it is possible to reduce the canister size. A cylinder with 1.3 m diameter and a length of 5.6 m can accommodate this fuel, still with a steel/copper compound. The total weight will be about 38 ton. This canister is cheaper and the corresponding increase in bentonite mass, assuming no change in deposition tunnel diameter, will not considerably counteract the saving. The lower weight will also contribute to a smoother handling in the deposition procedure.

One further step can be taken. If the canister is made of only copper, where the copper has to take care of both the outer pressure and the corrosion resistance, a canister with 1,18 m diameter and a length of 5.5 m is obtained. The pressure retaining factor will lead to a copper thickness of 128 mm and the weight will be 29 tons. This alternative gives the cheapest canister and the advantages as mentioned above are further stressed. A pure copper canister is also clearly cheaper than a compound body. It can be assumed that tightness welding of the copper need only be made to a thickness of about 30 mm, which is todays technology.

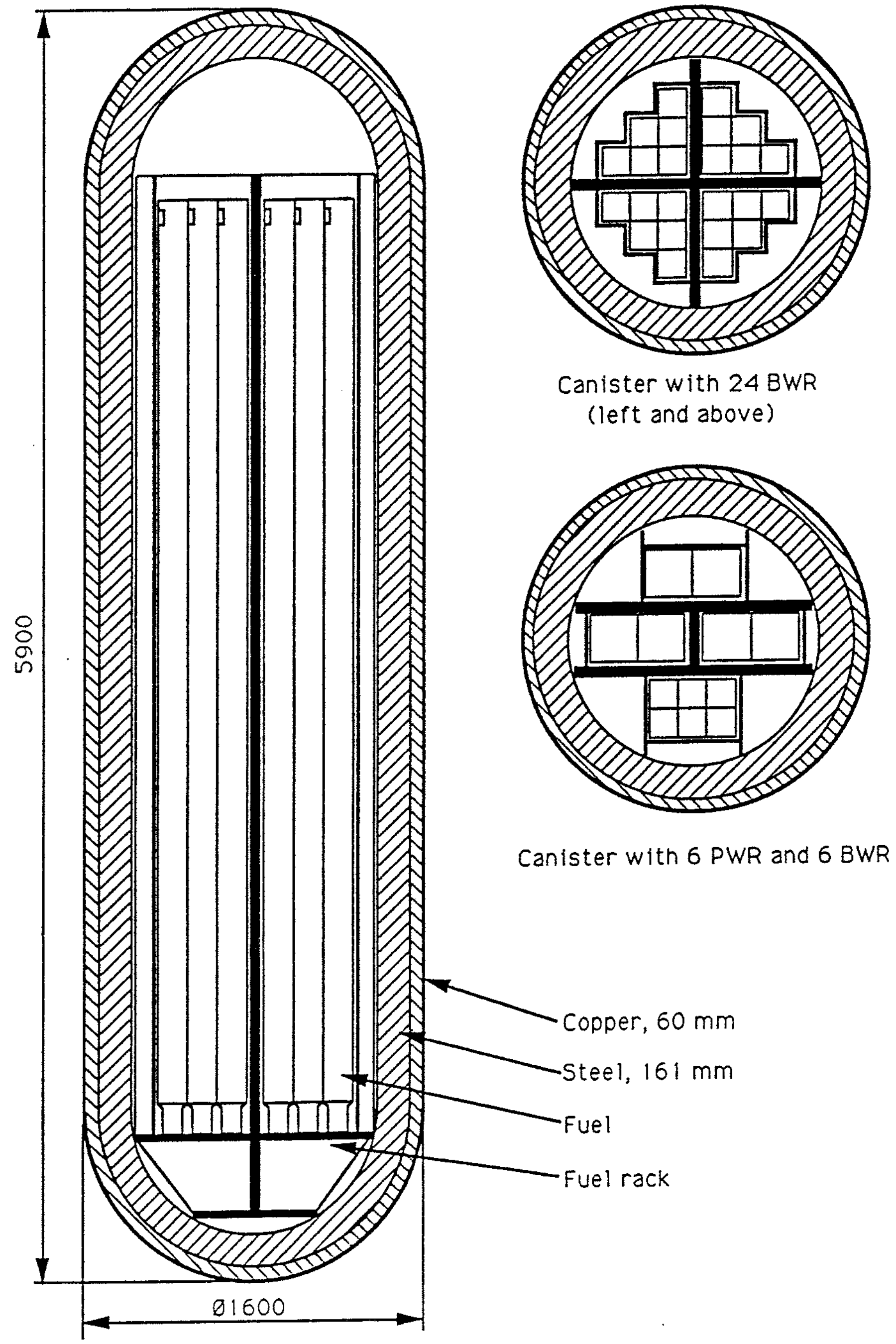

Figure 3-1 Canister for long horizontal tunnels

4. PRINCIPAL LAYOUT FOR THE LONG DRILLED BOREHOLE REPOSITORY

4.1 Depth of the repository

The long drilled borehole concept presented as the main concept in this report could be located at levels of between 500 och 1500 m. A greater depth provides more rock between the waste and the biosphere. Based on experience from deep boreholes, the bedrock permeability also decreases with depth, but this effect will be site-specific. A greater depth will on the other hand increase the rock stresses and thus decrease the longterm stability. A greater depth compared to the KBS-3 concept should, however, be accepted due to the smaller and more favourable size of the tunnels and rock caverns.

For comparison with the KBS-3 concept, a depth of 500 m is suggested, but a deeper repository level should still be considered.

4.2 Principal layouts

Two principal methods to reach the repository level presented in Figure 2-1 have been considered, and Alternative A is suggested as the main concept. The advantages of Alternative A are among others:

- Lower total cost because:
    - it is probably cheaper, faster, and less complicated to construct a steep ramp compared to a vertical blind shaft.
    - when beeing down at repository level, the vertical shafts are constructed by raise-boring.
- It is judged to be safer (by TYRÉNS) to transport the canisters down by a vehicle or a railbound system compared to lowering them down via a hoist.

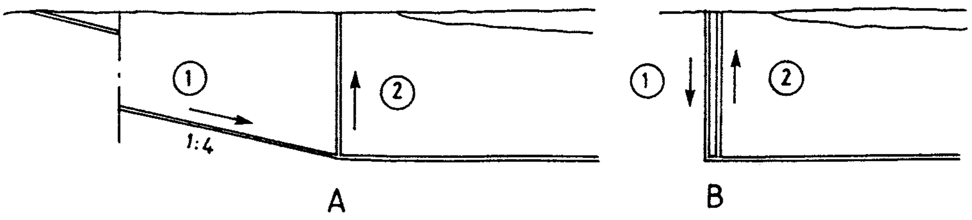

Figure 4-1 Possible principal layouts

4.3 Description of the main concept

The proposed layout for the repository is presented in the foldout drawings, and will consist of the following parts:

- A steep bored ramp, 1:4, down to the entrance of the investigation tunnel at -600 m.
- A short drilled and blasted tunnel between the steep ramp and the trans-shipment station at -500 m.
- A trans-shipment station that is used during construction of the tunnels and deployment of canisters.
- A main pumping station for drainage water and a rockcavern used during the construction period at -600 m.
- Vertical shafts for ventilation and other supplies, and for emergency evacuation.
- One bored investigation tunnel at -600 m which constitutes an extension of the steep ramp.
- Three, 4.5 km long bored deployment tunnels with a diameter of 2.4 m at -500 m, spaced 100 m apart.

It is important to remember that the presented layout is one possibility among others. The layout is based on an off-shore location which might be less suitable on-shore. Local geological prerequisities will of course influence the final layout.

The choice of a steep ramp is based on safety considerations when lowering the canisters down to the repository level and economic considerations during construction. The construction period could be reduced considerably if the steep ramp is constructed by TBM technology in the same operations as the investigation tunnel. The canisters will enter the trans-shipment station via a ramp in a horizontal position, and there is no need to tilt the canister from the vertical axis, which would otherwise be the case if the canisters were to be lowered down through a vertical shaft.

The trans-shipment station, approximately 50 m long, will be used as a working area during construction and deployment of canisters. A length of at least 50 m is needed in order to provide sufficient room for the TBM-machines and trans-shipment of canisters. The size should be minimized to ensure longterm rock stability and of course from a cost point of view.

The vertical shafts constructed by raise-boring will be used for supplies such as ventilation, electric power, compressed air, drainage water, etc. and for the emergency evacuation of personnel.

The design incorporating an investigation tunnel below the repository has many advantages, which are summarized below:

- The investigation tunnel will be used for geological investigations during construction. From the tunnel it will be possible to conduct core drilling, geophysical and geological investigations.

- The final layout of the repository will be based on the geological results of tunnel surveys together with surface investigations.

- During construction, it will be possible to drill boreholes between the investigation tunnel and the deployment tunnels, if needeed, for electricity supply, drainage, etc.

- The investigation tunnel could also be used as an inspection tunnel during any required time frame.

It is proposed that the investigation tunnel should be located below the repository. However, if requested, this tunnel could also be constructed above the repository.

The total required length of the deployment tunnels is estimated to be about 13,5 km. The distance between the tunnels will be dependent on the heat flow from the waste. A distance of 100 m has been suggested by Clay Technology based on temperature estimates. One obvious advantage of a fairly short distance is that cross tunnel geophysical investigations will be facilitated. The choice of three parallel tunnels is based on the following factors:

- One singel tunnel should not be longer than about 6 km in order to facilitate ventilation and power distribution to the TBM.

- In order to reduce mobilization costs the number of tunnels should not be too many.

- At least three tunnels is needed in order to get a suitable working cycle and redundancy during deployment of canisters.

All drainage water from the ramp and drilled tunnels will flow towards a main pumping station at -600 m. A simple handling system for drainage water is important due to the long time frame during which the repository will be open for construction works and deployment of canisters.

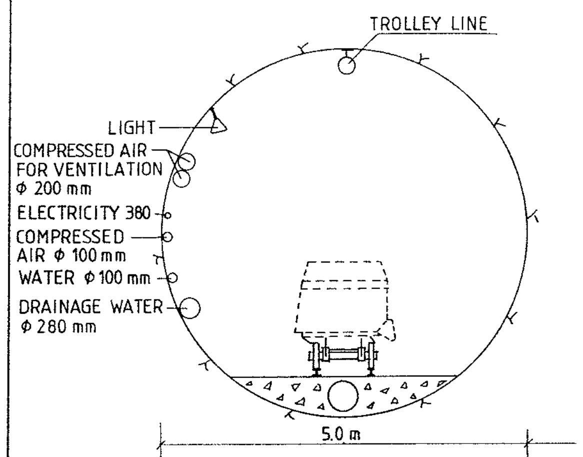

A-A RAMP AND SURVEY TUNNEL

SCALE 1:50

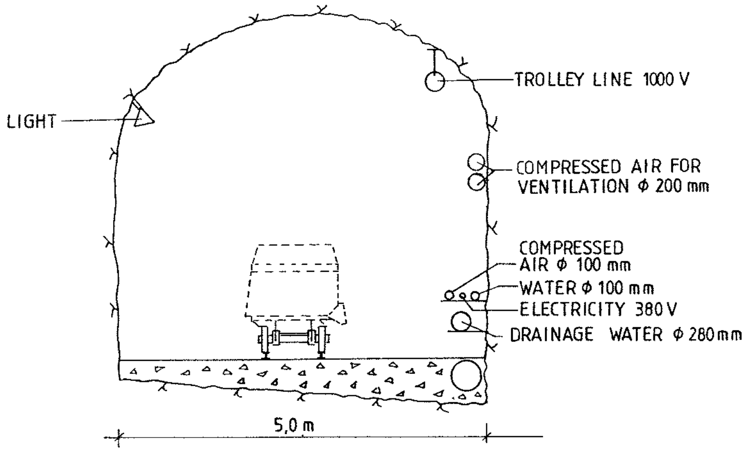

B-B TUNNEL BETWEEN THE DRILLED RAMP AND THE DEPLOYMENT TUNNEL

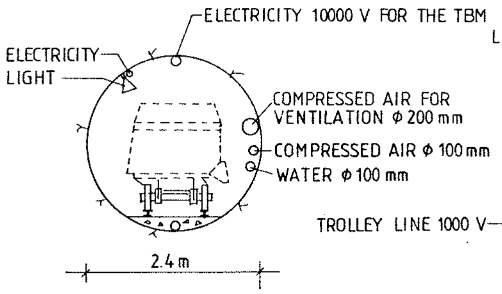

DEPLOYMENT TUNNEL DURING CONSTRUCTION

SCALE 1:50

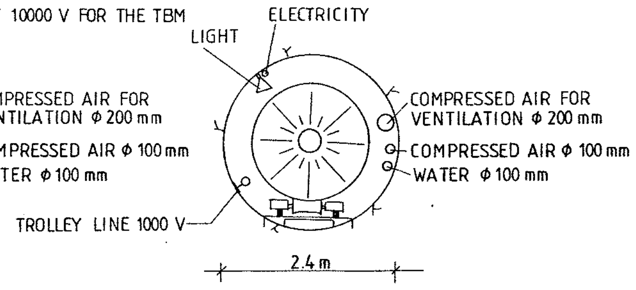

DEPLOYMENT TUNNEL DURING DEPLOYMENT

SCALE 1:50

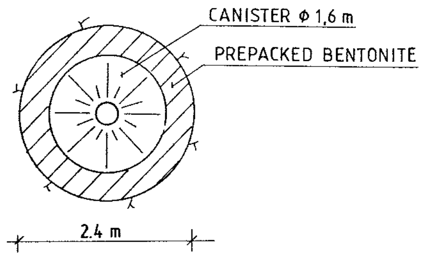

DEPLOYMENT TUNNEL AFTER DEPLOYMENT

SCALE 1:50

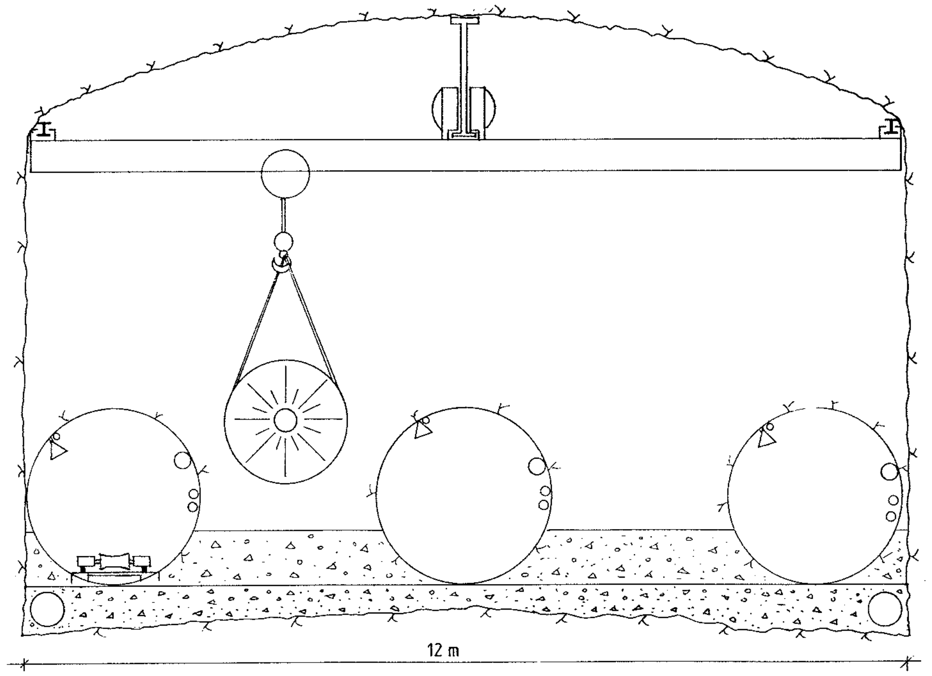

TRANS-SHIPMENT STATION DURING DEPLOYMENT

SCALE 1:50

REG	ANT	REGISTRERINGEN AVSER	SIGN	DATUM

TYRÉNS
BOX 512, 172 29 SUNDBYBERG. TELEFON. 08-733 85 00

RITAD | GRANSKAD | HANDLÄGGARE SANDSTEDT/WICHMANN
SUNDBYBERG 91-08-06 Håk Sandstedt

STORAGE OF NUCLEAR WASTE IN LONG DRILLED TUNNELS
DETAILES

SKALA 1:50
UPPDRAGSNUMMER 40-41618
RITNINGSNUMMER 02
REG

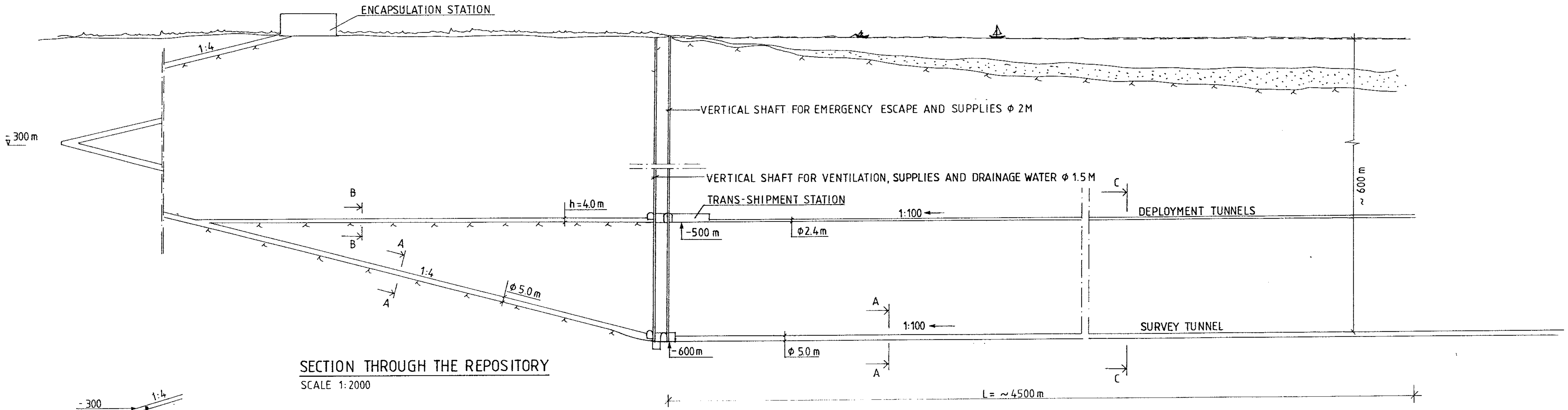

SECTION THROUGH THE REPOSITORY

SCALE 1:2000

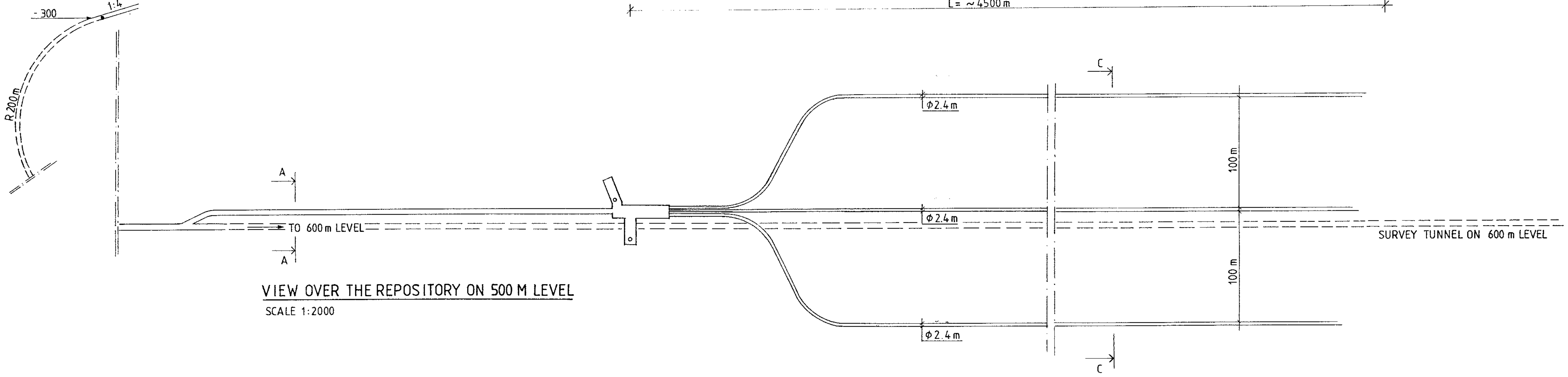

VIEW OVER THE REPOSITORY ON 500 M LEVEL

SCALE 1:2000

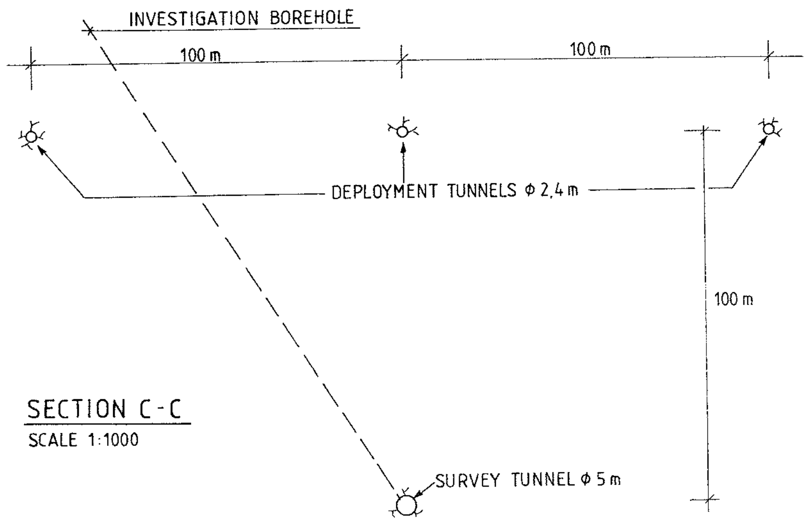

SECTION C-C

SCALE 1:1000

REG	ANT	REGISTRERINGEN AVSER	SIGN	DATUM

TYRÉNS
BOX 512, 172 29 SUNDBYBERG TELEFON 08 [illegible]

RITAD
GRANSKAD
HANDLÄGGARE SANDSTEDT/WICHMANN
SUNDBYBERG
91-08-06 Håk Sandstedt

STORAGE OF NUCLEAR WASTE
IN LONG DRILLED TUNNELS
PRINCIPAL LAYOUT

SKALA
UPPDRAGSNUMMER 40-41618
RITNINGSNUMMER 01
REG

5. ALTERNATIVE LAYOUT

5.1 Deployment of maxi canisters

When discussing various methods for transportation of canisters down to the repository level and final deployment it has been suggested by Clay Technology that one method of deployment could be to arrange the canisters inbedded in bentonite at surface. This implies transportation and deployment of a very large package with a length of about 6 m and a diameter of approximately 2.3 m with a total weight of 100 tons. The idea is to push the canister down on steel skids all the way from surface and into its final position. With this system it will be impossible to force the canisters through any bends, and the deployment tunnels should therefore be as straight as possible.

As suggested in Figure 5-1, the proposed layout will consist of two parallel tunnels 100 m apart. Two deployment tunnels will be needed in order to receive redundancy if a canister package becames stuck, bearing in mind the very small tolerances. At the repository level, some type of tilting mechanism will be needed in order to change the direction to a horizontal position from the steep ramp. Transportation in a vertical bend should be avoided due to tight tolerances and high forces in the two ends of the canister-bentonite package.

The friction factor between the skids is estimated to more than 1. It is, however, important to recognize that larger forces will be needed to start the canister to move. In order to reduce the friction between the skids some type of lubricant could be used. However, any other material with a low friction rate could also be used on the skids.

Communication down to the repository level will be conducted through drilled shafts connected to a tunnel between the two deployment tunnels. A main pumping station is also situated adjacent to the vertical shafts.

Compared to the proposed main concept in this report, this system incorporating long straight tunnels does not offer any flexibility in connection with the geological subsurface condition that may be encountered. If unsuitable geological conditions are encountered, the strategy should be to bore longer tunnels out into a better geology. If requested, an investigation tunnel could also be driven below the deployment tunnels.

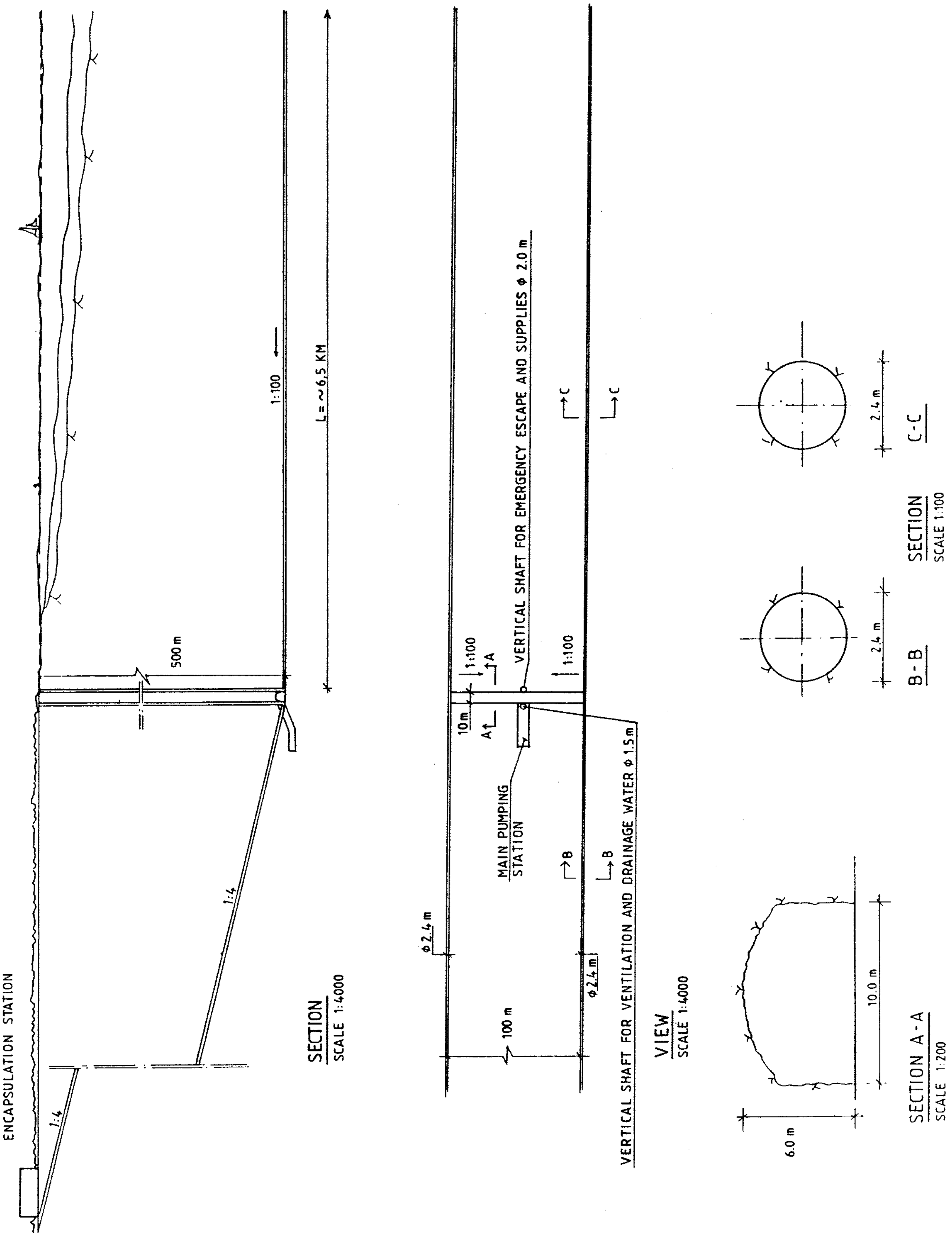

Figure 5-1 Layout for deployment of maxi canisters

5.2 Off-shore location some distance from the shore

It has been suggested that a repository in crystalline rock below a sedimentary rock sequence has safety advantages. Brief hydrogeological estimates indicate that the water convection rate to surface is reduced by a factor of 1/1000 if the crystalline rock is covered with a permeable sandstone. Such geologies are for example, to be found in the Baltic close to the islands of Öland and Gotland and south of the city of Kalmar. In order to reach this environment from mainland Sweden, a fairly long tunnel will be needed. From a safety point of view (emergency evacuation) and logistics, two parallel access tunnels will be needed.

The commission from SKB does not include a further study of this concept.

5.3 Compact layout with drilled tunnels

The purpose of this report is to present a repository consisting of long tunnels suitable for an off-shore location. It is, however, also possible to design a compact layout with drilled tunnels similar to the KBS-3 concept. In the layout presented in Figure 5-2 the tunnels are proposed to be drilled, using horizontal raise-boring technology, with a diameter of 2.4 m. With available steering techniques, both raise-boring and TBM boring could be conducted with the same directional control. In order to receive geological data from the deployment tunnels before reaming to requested size, the pilot hole could in a first step be drilled with 100 % coring.

The repository could also be constructed with smaller diameter boreholes if requested.

Modern TBM technology could also be used, and it is possible to bore with very small curve radius and thus construct almost any requested layout.

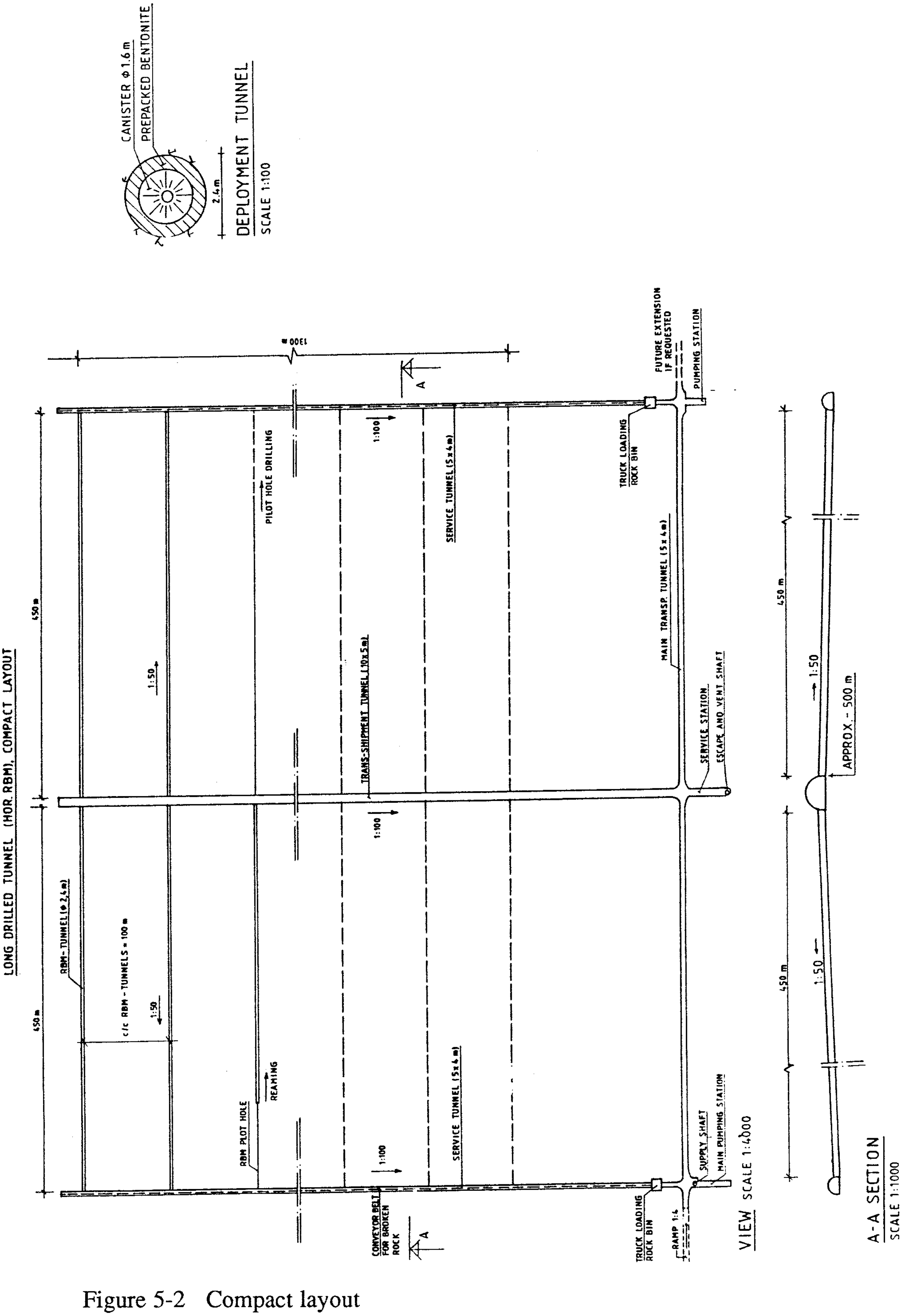

Figure 5-2 Compact layout

6. GEOLOGY

6.1 General

The repository area shall consist of bedrock with good properties for storage and tunneling. No major fault zone, crushed rock-zones or parts with high fissuring shall cross the area and the water inflow shall be low. The tunnels must be stable during the construction period and deployment, which is estimated to be about 20 years.

A flexible layout for the repository is desirable bearing in mind both the difficulties in investigating the area in detail from above (specially for an off-shore location) and the assumption that it is hard to find an area large enough with good bedrock. This leads to the conclusion that it would be advantageous if the layout can be adapted to the rock conditions found mostly by subsurface investigations made from the tunnels. During the years to come, improvements will be made in the methods used for bedrock surveys, particularly in connection with geophysical methods such as electric-, seismic- and radar methods.

6.2 Bedrock and rock type aspects

A suitable area for a repository shall be located in an uniform rock mass without any major tectonic features. The fissuring shall be low to medium. No major zones of disturbance, such as fault lines etc, shall cross the area, although a nearby deepgoing zone, which can give stress relaxation, could be of advantage for the stress regime at depth. The water-flow in the bedrock shall be low.

A detailed discussion about the suitability of different rock types has not been a part of this feasibility study. However, the prerequisities will in principal not differ for the long borehole concept compared with the KBS-3 concept.

Due to the natural variations of the bedrock, it is important to obtain information on the different rock types in an area of investigation, their structural behaviour, weathering, stress directions etc. in order to make a geological model at depth.

6.3 Hydrological and rock-mechanical aspects of the repository

A flexible layout of the tunnels is preferable, especially in order to avoid troublesome zones and to achieve favourable rock-pressure on the walls. The optimal tunnel direction will be parallel to the strongest horizontal stress. At great depth, the main stress direction can be presumed to make only minor alterations in a homogeneous block. On the other hand, some fissure zones will be passed where the magnitude and direction of pressure will change. Data from the Gravberg-1 borehole shows a maximum variation in stress direction of 55° between different blocks in the rock mass.

In order to make the drilling easier, the tunnels shall incline slightly upwards from the starting point at the ramp so that the water can be drained out from the tunnels without pumping. The permeability of the rockmass will of course vary, and is hard to calculate. Estimations based on experiments and borehole tests indicate rock mass permeabilities of 10^{-6} to 10^{-15} m/s with perhaps a mean value of about 10^{-10} m/s. A value of 10^{-10} m/s is calculated to give about 6 l per day and metre of tunnel, and 13,5 km of tunnel will then give about 80 m^3/day. In order not to handle a greater inflow from fissure zones, it will probably be necessary to tighten them to a level of about 10^{-9} m/s. The tightening shall be made by grouting before and after TBM boring. Grouting in order to stop or diminish the water inflow for shorter periods can be useful and necessary. In the long run, it is perhaps not advisable to be dependent on the sealing effect from grouting because of natural alteration of the sealing components with time and due to effects caused by the increased temperature. However, longterm stability of grout is now studied intensively.

Fracturing generated by the construction of the tunnel and the possible need for some type of barrier combined with sealing of the surrounding bedrock is discussed in chapter 10.

The tunnels for storage are in general supposed to be unsupported, which is a conclusion from the results of the TBM-driven Saltsjötunnel (7 km in central Stockholm).

There will always be parts of the tunnels that are not suitable for deployment. At least one major fault zone and 2-3 smaller fissure zones must be estimated for every tunnel of 4 km in length. The zones will decrease the available length of the tunnels for deployment by 3-500 metres due to their alteration, width, dip and how close to the zones it is possible to store canisters.

6.4 Experience from bedrock in Swedish mines and deep mines in northern America

Sweden has a long tradition in mining and has been in the frontline for developing new machinery and mining methods. The iron ores in the middle of Sweden (Bergslagen) are often deep and have been mined down to about 1.000 m. The ores were mined underground by benches in open stopes (open stoping methods) hundreds of metres in extension vertically and horizontally. This was possible due to good rock conditions in the side walls.

The predominant rock type in Swedish mines is a pre-Cambrian porfyric vulcanic rock called leptite, similar to gneiss. Drifts and shafts in the mines are kept in an unaltered and stable bedrock separate from the ore body.

At deep levels in the mines there are always deformations, rockburst and fracturing during the mining period. When the mining, has been finished the bedrock is normally settled and the drifts remain unchanged for hundreds of years. There are mines in Sweden that have been waterfilled and reopened after several decades. They have no roof support by means of rock bolts and normally show stable walls in drifts if they are in unaltered rock.

Water inflow into Swedish mines varies in general from one mine to another. The inflow of water depends on the amount of water above, mining method, and frequency of cracks in the bedrock. The older iron ores in central Sweden (Bergslagen) often show a tendency to become drier below a level of 500 m. This is due to the decreasing amount of open cracks and the increasing rock pressure at depth.

During a study tour to mines in Nothern America in October 1990 the following subjects were examined:

- Mining in shallow and deep mines.
- TBM technique with high rock pressure.
- Shaft sinking to a level of 2200 m.

At Stillwater in Montana and Macassa in Ontario, mining was performed at 2-300 resp. 2000-2200 m. Both mines were experiencing serious problems with rock stability. At Stillwater breaking rock was caused by excessively heavy blasting, and the rock walls were anchored by rockbolts throughout the mine. At Macassa, rockbursts occured but were eliminated by heavy blasting ("destressing blasting"). They also used a mining method in which the mined areas (stopes) were filled with concrete, and mining continued below.

At Fraser Mine in Ontario, a TBM with a diameter of 2.4 m was used in an attempt for boring of an investigation drift at a level of 1500 m. The drift was in a brittle and homogeneous diorite. Because of the smooth and unfissured walls from the boring the high rock pressure made the walls burst. The machine became partially stuck after 40 feet of boring. Before the machine became stuck, the capacity was about 11 ft/hour.

The TBM at Fraser Mine is a tight machine with limited space for repair and changes of cutters. It is also difficult to bring fresh air into the tunnel front when working at the machine. Even though the machine did not work satisfactory the result shows that TBM boring in hard rock with a diameter of 2.4 m is within reach for the industry.

The shaft at Macassa Mine, Kirkland Lake, Ontario, was sunk from the surface down to a level of 2200 m. The shaft was mined by bench blasting to a depth of about 1500 m. From there, the old mine system was used for drilling 100-250 m long holes downwards, and blasting was carried out from a lower level beneath. Rockburst occurred at certain levels in the shaft and in certain rock formations. The rock was in general destressed by heavy blasting in the mine.

7. STRATEGY FOR SITE INVESTIGATION

The necessary geological surface investigations needed for the localization of a repository consisting of long tunnels will not differ in principle from what has already been used within the KBS-project. The difference in basic layout, long tunnels off-shore compared to a more compact repository on land, will of course influence the strategy for site selection and the geological investigation program.

The prerequisities for geological investigations off-shore will, however be less favourable and the prediction from the surface will be more uncertain. It is not possible to conduct normal surface investigations, and instead more information will be gained by geophysical measurements using for ecample, various seismic methods. It will also be more difficult and expensive to conduct core drilling.

In order to find a suitable localization a step by step procedure is suggested where the ambition in each step is dependent on achievable results and economic considerations. The basic philosophy is to carry out as many of the geological investigations as possible during the construction period, and to adapt the final layout to the rock conditions find subsurface. Below is a presentation of a suggested investigation strategy in which each step is finished by an evaluation of the established expectation modell. The investigation program for the next step should also be revised based on the results achieved .

<u>Investigations</u>	<u>Goal</u>
Surface investigation type KBS-3 including an off-shore seismic investigation	Detail layout of the ramp down to the repository level and a preliminary layout of the repository
Investigations at the level for the deployment and investigation tunnel	Detailed design of the the investigation tunnel
Investigations from the investigation tunnel	Detailed layout of the deployment tunnels
Final geological investigation and documentation from all tunnels	Approval for deployment

The surface investigations will include the normal procedures developed within the KBS program when applicable. Compared to normal onland investigations, more effort will be concentrated towards geophysical investigations which now is more and more adapted to crystalline rock conditions. Based on the surface investigations some core drilling will be conducted in various tectonic blocks and border zones. Due to cost, it is necessary to limit the drilling program.

The steep ramp down to the repository will be used for geological documentation and investigations such as core drilling. Down at the repository level, additional core drilling will be conducted in order to evaluate the first parts of the deployment and investigation tunnel. The coreholes will also be used for hydraulic- and rock-stress measurements and for geochemical idenfication of the groundwater.

The investigation tunnel is proposed to be located below the deployment tunnels and it will be possible to investigate the rock mass surrounding the repository by core drilling. It will also be possible in detail to evaluate various fracture zones crossing the tunnel. From a tunnel construction point of view, it will also be possible to gain valuable information about difficult zones crossing the repository, and, for example pregrouting operations could be planned in advance. With a tunnel below the repository it will be possible to conduct a detailed seismic investigation with geophones in the tunnel. The energy will be generated by an airgun in an array over the repository, and with the resulting data it will be possible to construct a tomographic picture of the rock mass.

When all tunnels are drilled it will be possible to detail the geological documentation of the rock mass surrounding the repository, and based on this final result, decide which parts of the tunnels are suitable for the deployment of radioactive waste.

It has been proposed that the surface investigations should be kept down to a minimum and that all necessary geological investigations and documentation should be conducted from the access ramp and deployment tunnels. If unfavourable geological conditions are encountered, the deployment tunnels could be fairly easily and cheaply extendend into better geology. This strategy is, however, not favoured by the authors of this report.

Many different methods are today available for investigations of the shallow bedrock from the air, the surface or down in boreholes, and rapid development is going on. However, the main problem is to obtain a clear impression of the conditions deep down in the bedrock. An increasing interest in deep rock investigations from, the nuclear industry among other sectors, will speed up the development of new methods. Better instruments can be expected for measuring and detecting fissure frequency, fissure zones etc. deeper down in large rock areas both from the surface and in boreholes. New gravimetric, seismic and radar methods are of particular interest. One trend is that geophysical methods developed for the oil industry are now beeing adapted for crystalline rock conditions.

8. ROCK MECHANICAL CONSIDERATIONS

As discussed in the previous Chapter 4, a depth of between 500 m and 1500 m has been proposed for the repository tunnels. In order to evaluate a suitable layout for the repository and the size of ramp, shaft, trans-shipment station and repository tunnel a brief rock mechanical evaluation has been conducted. The estimate is based on a depth of 1500 m for the repository. Even though the results indicate that it should be possible to construct a repository at such levels with a reasonable long-term stability, a repository level of about 1000 m is suggested and some information also indicates that a depth of 500 m may be suitable due to rock mechanical considerations.

It is important that the final repository level is based on the local conditions in the area chosen for the repository. Low, stable, insitu rock stresses within a uniform rock mass are desirable.

Experience from deep mines gives a fairly variable picture of the long-term stability. Both stable and unstable conditions have been reported. The stress regime in a mining area, however, normally varies considerably due to the geology, with ore bodies and other surrounding rock types. This fact, together with the rock mechanical estimates carried out, shows that it is important to investigate the stress regime in an area of interest at an early stage in order to locate areas with low and stable insitu stresses.

Recent experience from deep mines in northern America, where tunnels have been constructed with both TBM technology and drilling and blasting, shows that the drilled tunnel is more sensitive to high stresses. During blasting, a destressed zone is created around the tunnel and the active stress is pushed out from the rock wall into the undisturbed rock mass, see Figure 8-1. Based on this approach, a stable tunnel with a minimum of disturbed zone will be created if the drilling is carried out in an isotropic rock mass. As can be seen in table 8-1, such prerequisities could be achieved at a depth of about 500 m.

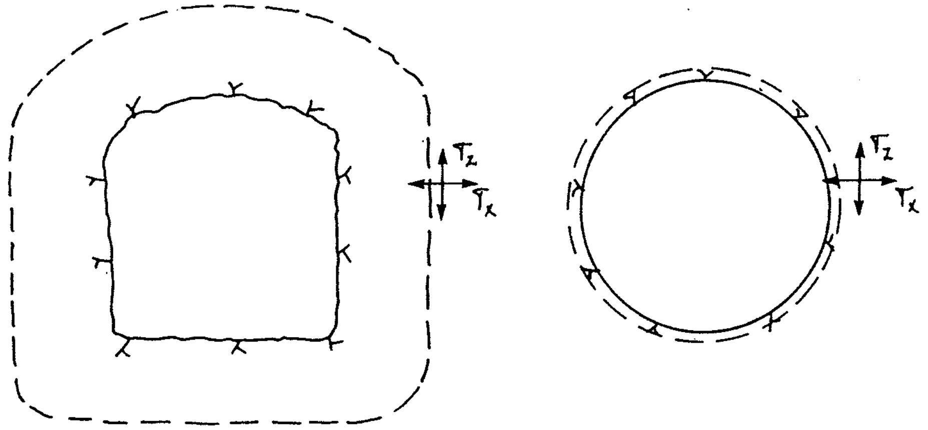

Figure 8-1 Disturbed zone around a drilled and blasted tunnel

A rock stress estimate for depths of 500 m, 1000 m and 1500 m is presented in table 8-1. The insitu rock stress estimate is based on Rummels formula (Rock Mechanics of the Gravberg well No 1, Ove Stephansson et.al. 1990).

$$Sv = 0.027 \cdot z \text{ MPa}$$

$$\frac{SH}{Sv} = \frac{250}{z} + 0.98 \text{ MPa} \qquad z \text{ in meters}$$

$$\frac{Sh}{Sv} = \frac{150}{z} + 0.65 \text{ MPa}$$

Table 8-1 Insitu rock stresses for depths of 500 m, 1000 m and 1500 m based on Rummels formula

Depth	Sv MPa	S_H MPa	Sh MPa
500 m	13.5	20.0	12.8
1000 m	27	33,2	21.6
1500 m	40.5	46.4	30.4

As can be seen from table 8-1, isotropic stresses will be encountered around the tunnel at a depth of approximately 500 m if the tunnel is constructed parallel to the maximum horizontal stress. However, at this shallow depth the stresses will vary considerably both in amplitude and azimuth, and the insitu stress situation is site specific.

The estimates presented below show that the ramp, trans-shipment station and repository tunnels should be constructed parallel to the maximum horizontal stress. However, it is also important to consider the main fracture directions in the rock mass. The estimate also shows that all types of caverns investigated could be constructed without risking the gross-stability. No tension stresses are caused by the high insitu stresses. High tangential compressive stresses will however increase the risk of rockburst which is especially pronounced for the vertical shaft and the trans-shipment station.

It is of special interest to note that a vertical shaft is less favourable from a rock mechanical point of view than a ramp, due to the high anisotropic stress field created by the maximum and minimum horizontal stresses at greater depths. Breakouts created at 1500 m and deeper in the Gravberg-1 borehole are a similar phenomenon.

A layout with risks of rockburst should, if possible, be avoided in order to reduce the risk of secondary deformations.

Rockburst is difficult to predict because the phenomenon depends on local conditions such as rocktype, main-fracture frequences and direction, residual stresses etc. It is also important to note that rockburst as a phenomenon varies from "noise" in the rock to breakouts of large pieces of rock.

Rock mechanical estimates

The stability of the different rock openings has been analysed by using a continum model, the program package FLAC 2.10 and a Mohr-Coulomb failure criterion.

The material properties used in the modelling are the following:

Young's modulus	20 GPa
Poisson's ratio	0,27
Deformation modulus	11 GPa
Shear modulus	8 GPa

Tensile strength	8 MPa
Friction angle	50°
Density	2,7 t/m3

The insitu stresses at a depth of 1500 m used in the modelling are the following:

Minimum horizontal stress, Sh = 30 MPa

Maximum horizontal stress, SH = 50 MPa

Vertical stress, Sv = 40.5 MPa

Ramp. B = 5,0 m H = 5,5 m, Depth 1500 m

	Perpendicular Sh = 30 MPa	Perpendicular SH = 50 MPa
Tx	52.8 MPa	92.7 MPa *
Tz	70.8 MPa	51.2 MPa
Txz	23.2 MPa	28.8 MPa
Ex	12.7 mm	23.8 mm
Ez	17.0 mm	15.4 mm

* Risk of rockburst (popping ground)

"Trans-shipment station" B = 10 m H = 4 m, Depth 1500 m

	Perpendicular Sh = 30 MPa	Perpendicular SH = 50 MPa
Tx	43.5 MPa	56.2 MPa
Tz	95.6 MPa	92.3 MPa *
Txz	30.5 MPa	35.7 MPa
Ex	4.4 mm	13.1 mm
Ez	35.2 mm	33.7 mm

* Risk of rockburst (popping ground)

Repository tunnels Diameter 2.4 m, Depth 1500 m

	Perpendicular Sh = 30 MPa	Perpendicular SH = 50 MPa
Tx	44.2 MPa	81.2 MPa *
Tz	67.4 MPa	61.7 MPa
Txz	16.3 MPa	20.4 MPa
Ex	4.0 mm	7.8 mm
Ez	3.6 mm	5.7 mm

* Risk of rockburst (popping ground)

Vertical shaft Diameter 5.0 m, Depth 1500 m

	Sh = 30 MPa SH = 30 MPa
Tx	38.7 MPa
Tz	87.3 MPa *
Txz	30.3 MPa
Ex	6.9 mm
Ez	18.5 mm

* Risk of rockburst (popping ground)

9. TUNNELING TECHNOLOGY

9.1 General

A system for the final storage of high level radioactive waste puts very high demands on safety. Safety must be guaranteed both with regard to degree and to the amount of supplementary safety systems. The final solution adopted must primarily guarantee safety in the deployment technique.

In this chapter, different methods of constructing tunnels or shafts are discussed in order to create a cheap and flexible transport system during construction, and a system that will handle the radioactive waste in a safe way during deployment.

One way of proving the reliability of tomorrow's technology is to show how the technology of today is working in adjacent fields. The study is based on the development of mining and construction techniques today with regard both to techniques for drilling deep into the ground and for mining at great depth. Most of the techniques presented must be judged as proven technology but some more development work will be needed regarding to downward TBM boring in steep inclinations and TBM boring of small diameter tunnels.

This study is based on the author's experiences, developments at Swedish, USA and Canadian mines, discussions with manufacturers and contractors, and searches in available literature. Personnel from the project group have also visited DBE (Deutsche Gesellschaft zum Bau und Betrieb von Endlagern für Abvallsstoffe mbH) and USDOE at Yucca Mountain Project. Together with these two organisations excavation techniques have been discussed for safe disposal of radioactive waste.

During both the construction and the deployment period, all transportation and works will be powered by electricity. Systems used during construction should also be used during deployment as far as possible. All drainage water will be concentrated towards a main pumping station from, where it will be pumped to the surface. Normal pumping height is 4-500 m, and the number of pump levels will depend on the final depth of the repository. The repository area will remain open for a maximum period of about 20 years.

9.2 Transport system down to the repository

9.2.1 General

A transport system down to the level of the repository should be designed for taking out the muck during construction and for transporting canisters from the surface down to the level for deployment in a safe way during the deployment period.

All available current techniques for vertical transportation in the ground are designed to go the other way and for large volumes of rock.

The canisters with waste can be transported basically down to the repository level by three different methods:

A. Vertical shaft with the canister hanging free from cables.

B. Inclined shaft with the canister on rails hanging from cables.

C. Steep ramp with the canister driven by a vehicle down to repository level.

When comparing vertical shaft, inclined shaft and steep ramp Neste' OY in Finland found that the inclined shaft (55°) was optimal and the cheapest vertical drivage (verbally from Pekka Särkke 1990). The total time for sinking a 1000 m inclined shaft was estimated to be about 12 months. The shaft was intended to be used for the construction of a gas storage.

When optimizing the size of shafts, ramps and tunnels it is important to recognize that all open space should be re-filled after deployment with bentonite and that the cost for re-filling is higher then the excavation cost. Due to this pre-requisity the optimum size will be smaller compared to normall mining and construction works.

9.2.2 Shaft sinking

Shaft sinking can be done either with conventional drilling and blasting or by fullface boring.

Drilling and blasting

Conventional shaft sinking is normally done by drilling and blasting. Shafts in the deepest mines in Sweden (i.e. Stållberg and Idkerberget mines) with depths down to about 1000 m are sunk by this method.

Shaft sinking can either be done by bench blasting or blasting with a pilot hole. Bench blasting is carried out by blasting half the profile at a time. Using this method blasting is carried out towards one free space, see Figure 9-1, A. In Figure 9-1, B, a pilot hole is first drilled and the blasting is done towards this hole.

Rock is normally hoisted to surface by an elevator.

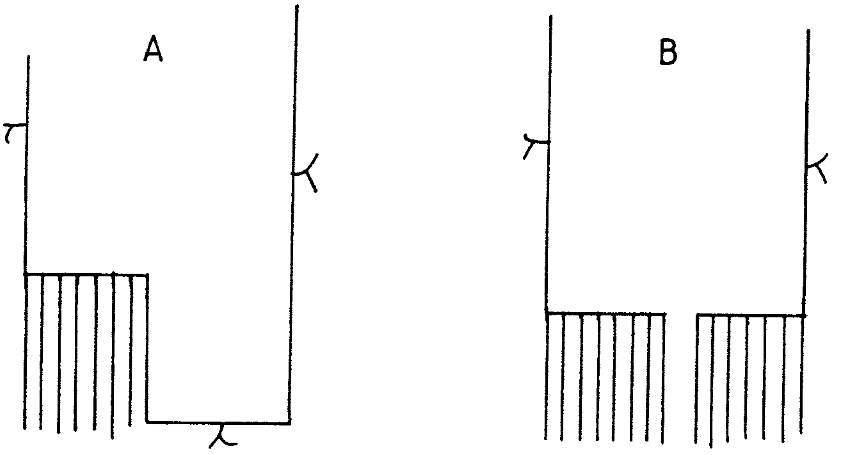

Figure 9-1 Shaft sinking by drilling and blasting

A. Bench blasting

B. Pilot hole blasting

Some examples of shaft sinking carried out during recent years worldwide are as follows:

- At the Erfdeel Dankbaarheid gold mine in South Africa 1984, a 2250 m deep shaft was driven. The shaft has a diameter of 10 m. The excavation speed was 100 m a month (S. Afr. Mine. Eng. J 1984).

- At the Macassa gold mine, Kirkland Lake, Ontario 1986, a 2217 m deep shaft was driven by means of bench blasting. The shaft was 2.6 x 8 m and was driven into granitic rock. The shaft was framed by timber and has space for two skips (8.6 ton each), a manhole, water and air ventilation (scales 1983). The excavation speed was 3 m/day (personal visit 1990).

- At Jang Seong coliery in Korea a 1000, m deep shaft was driven. An Alimak boring machine was used and the diameter was 6.2 m (Koslav 1987).

- At East Driefontein goldmine in South Africa 1985 a 2000 m deep shaft was driven. The diameter was 9.15 m (Thümmler et. al. 1986)

Shafts driven into soft and medium hard rocks are normally lined with concrete.

Costs for shaft sinking have been reported in the following projects:

Proj.	Year	Depth	Costs per metre USD		Area
			Excavation	Total	
East Driefontein	85	2000	13000	30000	ø 9.15 m
Macassa	86	2200	8000	15000	2.6x8 m
Hirivihaara (estimated)	90	800	-	30000	ø 7 m

Shaft boring machines

Shaft sinking by shaft boring machines (SBM) can be done using three different methods:

- Shaft boring by reaming upwards (raise-boring) (Figure 9-2 A), diameter 1-8 m.

- Shaft boring from above and hoisting upwards (Figure 9-2 C, D), diameter 5-10 m.

- Shaft boring by reaming downwards (Figure 9-2 B), diameter 5-10 m.

Raise-boring (Figure 9-2 A) of vertical shafts is done in two steps and between two levels in an underground structure. In a first step, a pilot hole is bored with a diameter of 250-300 mm. The cuttings are brought to the surface together with the drilling fluid. The direction of the hole is controlled either from surface or by stabilizers down the hole. When the pilot hole has reached the target space the bore head (reamer) is attached to the drill rods. The reamer is then pulled and rotated back to the surface.

The advantages of raise boring are:

- It leaves a smoth rock surface and does not disturb the surrounding bedrock.
- The drilling speed is 1-2 m/h with a high degree of accessability (75-90 %).
- A short rig-up time.
- Easy muck handling due to small cuttings and the fact that all cuttings falls down to the space below.

With today's techniques it is possible to bore up to about 1000 m deep shafts by raise boring. The final diameter in hard rock could be 3-5 m, but in weak rock the machine can manage a diameter of up to 7-8 m. As an example could be mentioned that a 1100 m deep ventilation shaft with a diameter of 4.44 m was drilled in Kloof Gold Mine, South-Africa, during 1989-90 in a very hard rock (compressive strength normally above 500 MPa).

A Tamrock raise boring machine has also reamed a 685 m long, ø 1,3 m, horizontal tunnel in Norway (1989). Horizontal tunneling by raise boring is a new task for the manufacturers. Both Robbins in Seattle and Tamrock in Tammerfors are introducing horizontal tunneling by raise boring. The main problem to solve is the muck treatment. The cuttings are brought out by high water velocity during the drilling of the pilot hole. During reaming to final size, the cuttings must be scraped out by a bucket formed in the shape of the tunnel bottom.

Shaft boring from above and hoisting upwards can be done either by drivage from the surface (maximum depth 800 m) or by drivage in the shaft. The drill-head uses cutter wheels that crush the rock. The muck is pumped or hoisted to the upper part of the machine from where the muck is hoisted to the surface. The method is mainly used in weak to medium hard rock but a considerably development in hard rock is forseen in the future.

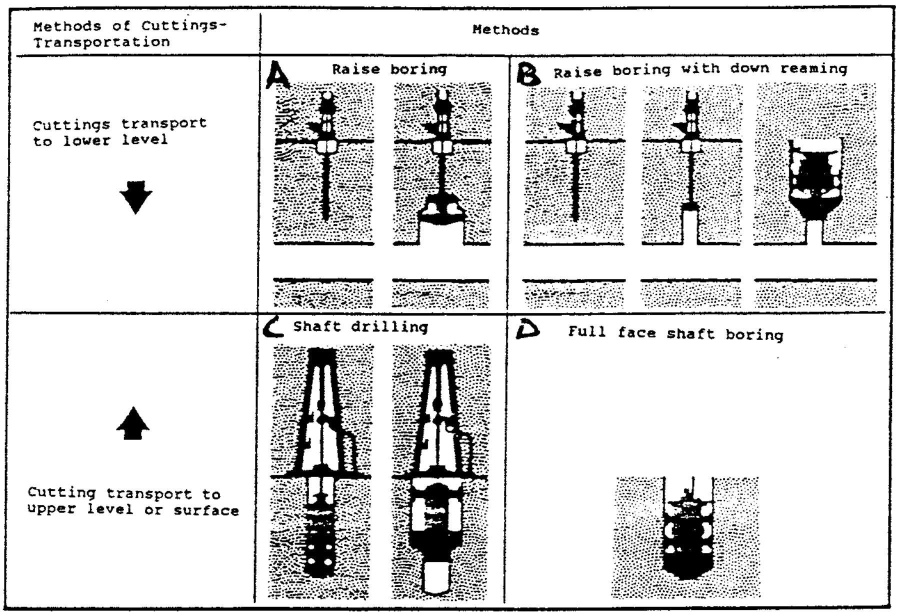

Figure 9-2 Shaft boring downwards and upwards (Wirth GmbH)

Different techniques of downgoing SBM have been studied in this report and are presented below.

Wirth, Maschinen und Bohrgeräte Fabrik GmbH, Erkelens, Germany, has developed a SBM named VSB, with a diameter at 5.8 - 9.5 m. The cutterhead is V-shaped (45-55°) with a vertical driving axle. The cutterhead works in water and the muck falls down into the centre from where it is pumped to the upper parts of the SBM. The SBM has today a maximum cutter pressure of 15 tons. However, a shaft in Korea has recently been driven with a cutter pressure of 40-60 ton/cutter. The Wirth SBM can today drill about 400 m/month in medium hard rock (Raine 1985).

The Robbins Company, Seattle, USA, has developed a SBM called Redpath Shaft Boring Machine, with a diameter of 6-7.6 m. The driving axle is horizontal and the cutterhead turns 360° in the front. Vertical transportation of muck is treated by a bucket from the shaft bottom to the top of the machine, and further to the surface by hoisting. The machine is primarily designed for medium to hard rock. Cutter pressure is about 20 tons. The machine is a prototype and has until now only been used a few times. Excavation speed is estimated at 200 m/month and twice the speed of conventional shaftsinking technique (Woods 1988, Robbins 1986).

The SBM today has a capacity 2-4 times faster than conventional shaft sinking. By using the SBM technique unnecessary fracturing of the rock is avoided and thus the need for rock support is reduced. By using SBM, manpower can be significantly reduced. For a repository for radioactive waste the advantage of higher rock quality in remaining rock is of prime importance rather than high excavation speed and thus low cost.

A principal cost comparison has been worked out by Norbert P Hankel (1983) between downgoing SBM with muck transport upwards and conventional drilling and blasting. He found that by using SBM, costs were halfed. Wirth has given a rough cost of 7,000 USD/m for the use of SBM (1990).

The accessibility of an SBM machine is 25 % for boring and the rest is disturbance due to service, geological mapping, rock support and inspections, see Figure 9-3.

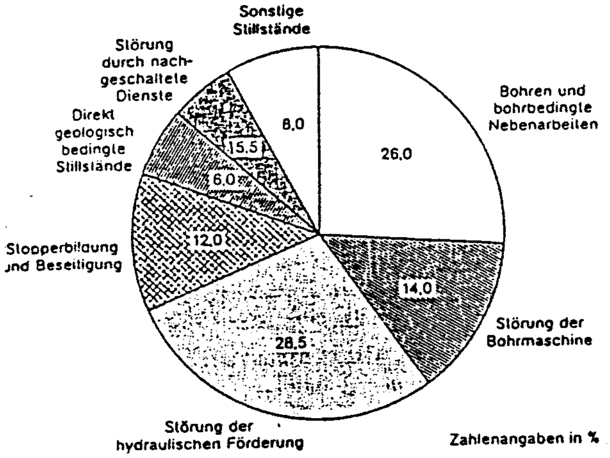

Figure 9-3 Time distribution for SBM (Wirth)

9.2.3 Inclined shaft

The objective of inclined shafts is mainly to use friction between the transport vehicle and the ground. Optimal inclination occur when the vehicle is about to fall over. Normally this angle is 55° against the horizontal. Inclined shafts are normally driven with conventional techniques. Significant advantages can be achieved by driving inclined shafts in comparison with vertical shafts i.e. speed, vertical transportation and safety.

Wirth has developed a tunnel-boring machine that could drill 45-90° against the horizontal by 4.5-11 m in diameter. The machine can, however, only drill from below and upwards, and is today only working in soft to medium hard rock.

Vertical hoisting

Vertical hoisting of rock in mined-shafts is done by skips. A normal skip can carry 5-10 ton, but there are skips in South Africa that carry up to 120 tons. LKAB in Kiruna is today hoisting loads from a level of 900 m using 40 ton skips.

Pumping of drainage water, distribution of electric power, water and air supply will also be supplied through the shaft.

9.2.4 Steep ramps

In vertical and inclined shafts, loads are hoisted, while in ramps they are driven or pulled. The possible inclination of ramps is mainly dependent on motor-outputs and friction with the ground.

Normal trains can manage a maximal inclination of 1.5 %, diesel-vehicles in open pits 10 % (1:10),and diesel-vehicles (LHD) in underground mines 14-15 % (1:7). The capacity of conventional construction vehicles is limited to these inclinations. The new generation of transport vehicles for underground excavation consists of electrohydraulic frame steering vehicles. These vehicles are designed for inclinations of up to 33 % (1:3).

Kraftbyggarna Entreprenad AB from Sweden has developed a new transport system which will basically be used together with TBM boring. The system is railbound with a capability of transportation in inclinations down to 1:4. The system is planned to be used for the first time in late 1991 and in a downward inclination of 1:10.

The muck can also be transported to the surface by conveyor belt systems which are comanly used in coal mines. Conveyor systems are now also designed for use together with TBM boring.

Some examples of steep ramps:

- Boliden Mining Co has constructed a steep ramp at the Aitik mine during 1989. The ramp has an inclination of 1:3.7 and is used for conveyor belt hoisting from the open pit and into the mill plant. The ramp was driven both downwards and uppwards from an access tunnel. A Tamrock diesel-vehicle was used for loading and transport (BK Diskussionsmöte 1990).
- At the Prosper-Haniel Colliery 1985 a ramp was driven from the shaft down to a level of -786 m. The ramp is designed for conveyor hoisting of coal. The ramp was 3653 m long with an inclination of 12.3° (1:4.6) driven by a road-header. The area of the tunnel was 22 m^2 and the rate of penetration was 8 m per day. The muck was elevated by a conveyor belt system (Banmann 1987).
- At the Olympic Dam Copper - uranium - goldmine in South Australia 1988, a conventional ramp was driven with an inclination of 1:9 from the surface down to a level of 360 m. Drilling, blasting and transportation with diesel-engines were used for excavation. At every 100 m in the ramp, 15 deep stockpiles were established as truck loading bays. Ventilation was provided from the surface through two vertical existing shafts. The tunnel area was 25-30 m^2 and the rate of advance was 350 m/month (Hall 1988).

Excavation methods

Two basic systems are proposed for the excavation of a steep ramp (> 1:7) in hard rock down to a depth between 500 and 1500 m. The excavation should preferably be carried out by electric motor-operated machines for loading and transportation, a method commonly used by the mining industry, or by TBM boring. Tunneling with the TBM technique offers the advantage of penetration rates that are about three times faster compared to normal drilling and blasting, which is an important consideration for long tunnels.

TBM boring downwards has been considered inconvenient. There are, however, some examples available in North America, and downwards boring is planned to be carried out with an inclination of 1:10 at Klippens hydropower station by Kraftbyggarna Entreprenad AB. Even though downward (more than 1:10) boring by the TBM technique in steep inclinations has not yet been carried out, discussions with manufacturers and contractors indicate that it should be possible to bore in inclinations down to 1:4. When considering the long time frame until the storage facility should be constructed , it must be judge feasible (by TYRÉNS) to bore the ramp down to the repository using the TBM technique and an inclination of about 1:4.

A new approach for the conventional methods of tunneling is to use diesel-electric systems for drilling, loading and transportation. Electric trucks and LHD have the following advantages:

- Strong engine
- More equal distribution of load over the vehicle
- Decreased emission of exhaust fumes.

Electric engines on mine-trucks work at 1000 Volt, have 3-400 hp and 4 or 8 gears. The trucks can manage an inclination of up to 40 % (1:2.5) and produce 370 kW in first gear at a speed of 2-4 km/h. The electric engine is placed at the back of the loader and is heavier than diesel LHD engines. This is an advantage at steep downgoing ramps. It creates a more equal distribution of load for the loader and makes it easier for the machine to drive into the blasted rock, load and turn it over to the truck.

Electric engines do not create any dangerous fumes. However, surplus energy is transformed into heat, which must be transported away by ventilation. Ventilation is therefor only dimensioned to evacuate explosion gases, dust from loading and surplus energy from engines.

Many manufacturers have developed electric systems for underground excavation. Some of them are listed below:

- TORO 400 E (loader) and 40 E (truck) in production at Kankberg Mine, Boliden AB, Sweden.
- GHH MK - A 25 ET (truck) in production at the Konrad Mine, Germany.
- Wagner Mining Equipment EMT-439 (truck) at several Canadian mines.
- Kiruna Truck at LKAB in Kiruna.

Electric trucks normally obtain their power supply from an overhead trolley line. In this layout, the trolley line is placed to one side of the tunnel centre, which lowers the roof height to about 4 m. Ventilation, electricity and water supply can be placed under the trolley line. The vehicles have a further 100 m of free cable in a wheel. The tunnel area should be about 20 m^2.

The ramp should have a minimum of curves from the surface down to the repository level. In any curves, the inclination must be less and the total length of the tunnel becomes longer. Transportation of the canisters, will also be easier if the ramp is straight.

Trucks should be loaded horizontally in stock piles at about every 100 m. This means that the bottom of the ramp every 100 m must be almost horizontal. The area must be large enough to cover a truck. The tunnel roof always follows the same inclination. At each 300-500 m level, a resting level is provided in order to both turn the truck and rest the engines.

Ramp design

It is proposed that the steep ramp and the investigation tunnel should be constructed by TBM boring with a diameter of about 5 m. Enough space should be available for the transport system and supplies, see figure 9-4 such as electricity, ventilation, water for boring and pipes for drainage water. The need for ventilation is determined by the fresh air for personnel and the cooling of heat from machinery. The air volumes required are reduced to about 20 % compared to a normal blasted tunnel with diesel equipment. In the investigation tunnel, adequate space should be provided for core drilling. As already mentioned, the muck will be transported upwards by either a rail system or conveyor belts. A rail system will also be needed for the TBM machine and for transportation of personnel and equipment. The same rail transportation system should preferably also be designed to be used during the deployment period.

A traditional tunnel will also be needed between the steep ramp and the deployment level. The suggested tunnel design, see Figure 9-4, could also be used for the ramp if it is decided to construct the ramp by drilling and blasting.

Supplies of energy, compressed air and water to the repository level can be provided from the ramp and vertical shafts. Ventilation can be supplied at low pressure in rubber tubes (about 1.2 m) or by high pressure in steel tubes (about 0.2 m). In straight singular ramps or, tunnels, it may be possible to have intervals of up to 5-6 km before a new ventilation inlet is necessary. Fresh air must be pumped from the surface to the tunnel front in tubes, from where the air is vented out through the tunnel. If a ramp is chosen for transportation down to the repository level, an additional air intake should be opened for ventilation of the deployment tunnels. This should preferably be through vertical shafts, constructed by raise-boring.

To ventilate blasts in the ramp and gain quicker access to the front for loading rock, the blast fumes can be sucked out in a separate tube. This means that the ramps will be furnished with two ventilation tubes, one for forcing the air in and one for sucking it out.

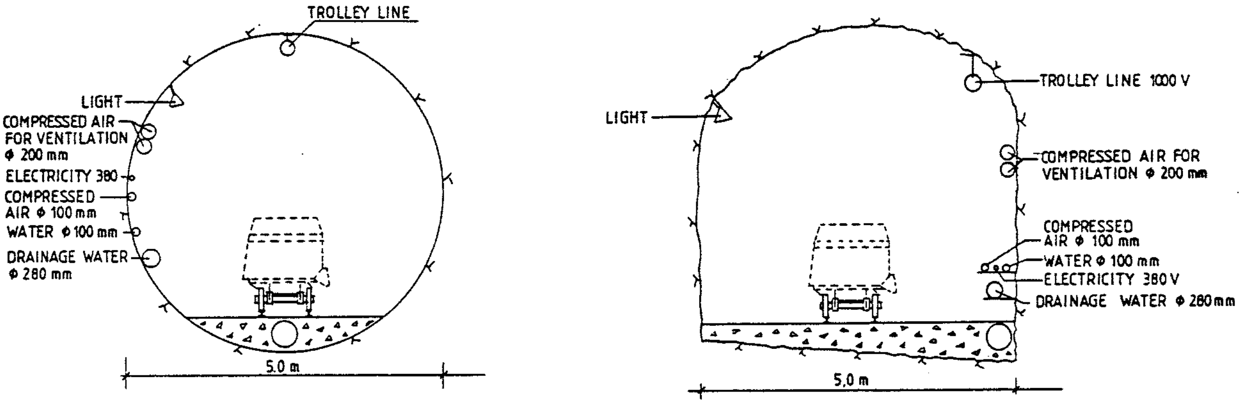

A B

Figure 9-4 Ramp design for TBM boring, A, and for traditional tunneling with electrically driven equipment, B

9.3 Tunneling at the repository level

Area for trans-shipment

The area for trans-shipment will be used during construction for replacing tunnel-driving equipment, stocks of spare parts, site huts, etc. Later, at the operation stage, this area will be used for changing vehicles from the ramp into the repository tunnels.

The roof height is about 6-8 m, i.e. high enough to hold a truck, canister and an overhead crane. The width of the area is about 12 m and the length about 50 m, the latter in order to provide space for the tunneling machine. A detailed analys of the required size is not included in this study.

Deployment tunnels - TBM tunneling

The deployment tunnels, ø 2.4 m, will be constructed by tunnel boring techniques. By using TBM-techniques the rock surrounding the tunnel is less disturbed compared to normal blasting, and a circular tunnel section is obtained that fits the waste canister. The thickness of the bentonite seal should be optimized due to the required sealing effect, requested heat transportation through the bentonite and cost considerations. It is important to remember that the cost of sealing with compacted bento- nite is higher than the excavation cost for the tunnels.

The general description on TBM boring in this chapter is of course also applicable for the boring of the steep ramp down to the repository level.

Discussions with manufacturers (verbal information from Robbins) shows that it is possible to design TBM machines for diameters down to 2.0 m. This is very important if the final canister size is to be reduced to 1.3 m, which is beeing considered by ABB-ATOM.

TBM has been used commercially in hard rock for about 10 years. The technique has primarily been used in Norway and Canada. 200 km of tunnels and 2-3 tunnels a year have been driven in Norway during the last 10 years using TBM technique. Four tunnels have so far been drilled in Sweden and two are in progress in 1991.

TBM-driven tunnels in hard rock have been used for seepage water (ø 3-5 m), hydro power (ø 5-7 m) and train and traffic systems (ø 7-8 m).

TBM-driven tunnels in various parts of the world today have diameters ranging from 2.4 to 11.5 m.

A full-face TBM working in hard rock consists principally of three parts:

- The cutterhead
- Transmission and control
- Mucking arrangement

The TBM uses electric power which normally is supplied to the machine at a voltage of 10.000 V. A transformer is kept on the machine to provide a constant working voltage of 1000 V.

The cutterhead consists of about 20 cutters that break out chips of the rock. This means that the pressure on each cutter must exceed the strength of the rock.

Mucking-out is carried out by conveyor belts that go on top of the machine from the cutterhead and back to stockpiles for further transportation to the surface by train, truck or conveyor system.

The side walls in the TBM-driven tunnel have a surface structure that is mainly formed by the size of minerals in the rock and the cutter-wheels. Grain size of the minerals is up to 5 mm. At intervals of every 1-2 m, the TBM-jacks take a new grip on each side of the tunnel, which forms a deep circular cut of about 5 mm in the rock on one side of the tunnel due to small sideward movements of the cutterhead. The cutters have to be changed every 10-20 m due to wear. This forms a 15 mm deep cut in the rock every 10-20 m. Altogether this means that the overall radial surface tolerance is ± 15-25 mm. The tunnel also has a fluctuation because of machinery and pegging. This fluctuation is about 0.5 m in wave height with a wave length of about 50 m.

The ongoing development on the market is to design machines for diameters of over 12 m or under 2.4 m. Larger tunnels are for traffic systems and smaller for different supply systems in cities or survey tunnels.

Falconbridge Mining Company has, together with other companies, developed a TBM called Compact Underground Borer (CUB). The machine is mainly designed for survey drifts in mines. The diameter of this prototype is 2.4 m and has a curve radius capability of 25 m. The CUB is designed for hard rock with a rock strength of less then 310 MPa. For more information about the CUB, see chapter 6 of this report.

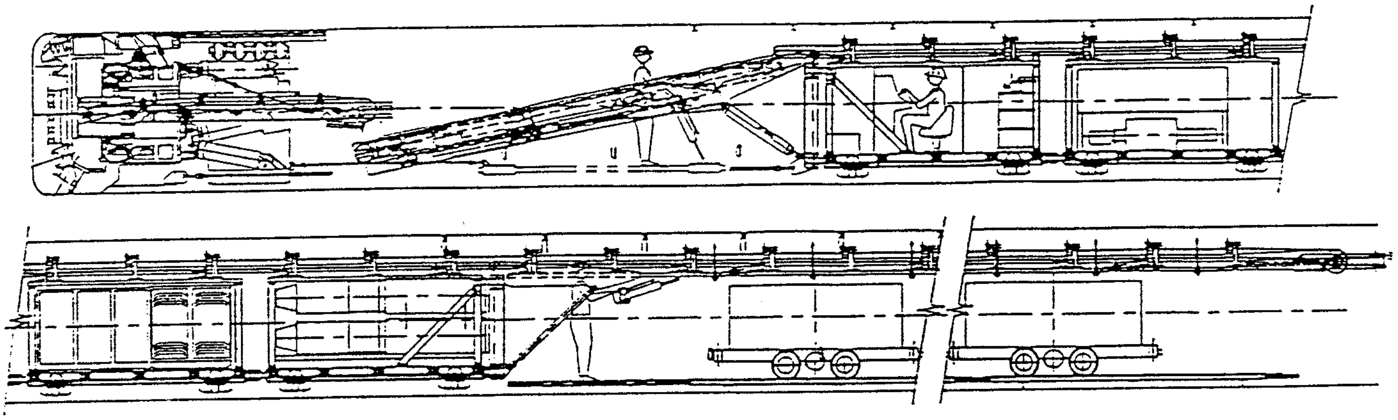

Figure 9-5 Compact Underground Borer (CUB) at Frazer Mine, Falconbridge Mining Company

TBM's of today have a penetration rate of about 3 m/h. The overall speed is, however, about 100-150 m/week owing to maintenance, surveys etc. Operating time can be divided as shown in Figure 9-6 (Saltsjötunnel in Stockholm, Tollerup 1989).

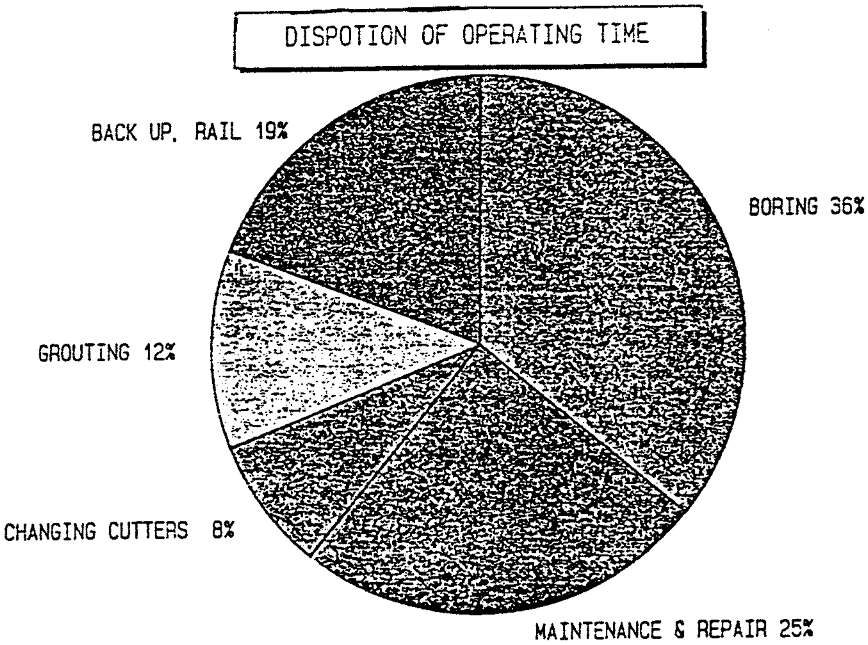

Figure 9-6 Operating time for TBM during the Saltsjötunnel project (Tollerup 1984)

Water is primarily needed during the construction of the tunnels. Water from the rock can not be used as process water for drilling and boring, and needs to be pumped up to the surface, because it is not clean enough.

During the construction stage, the deployment tunnels will be furnished with electricity for the boring machine (10.000 V), electricity for light, pumps etc, compressed air (ø 100 mm) for sounding drilling, and compressed air for ventilation (ø 200 mm). Transportation in the deployment tunnels will be carried out by a rail system with electric power from batteries. Due to the small size, a trolley system is considered inappropriate due to safety when working in the tunnel.

During the deployment period, the tunnels will be furnished with the same equipment apart from a high voltage powerline for the boring and the rail transportation system. Electricity supply for the transportation of canisters will be obtained from a trolley line. Compressed air will be used if any type of construction work needs to be carried out in the tunnels. When deployment is in progess the pipes for air, trolley line (1000 V), and cables for electricity will be dismantled in sections.

The furnishing of the deployment tunnels is presented in Figure 9-7.

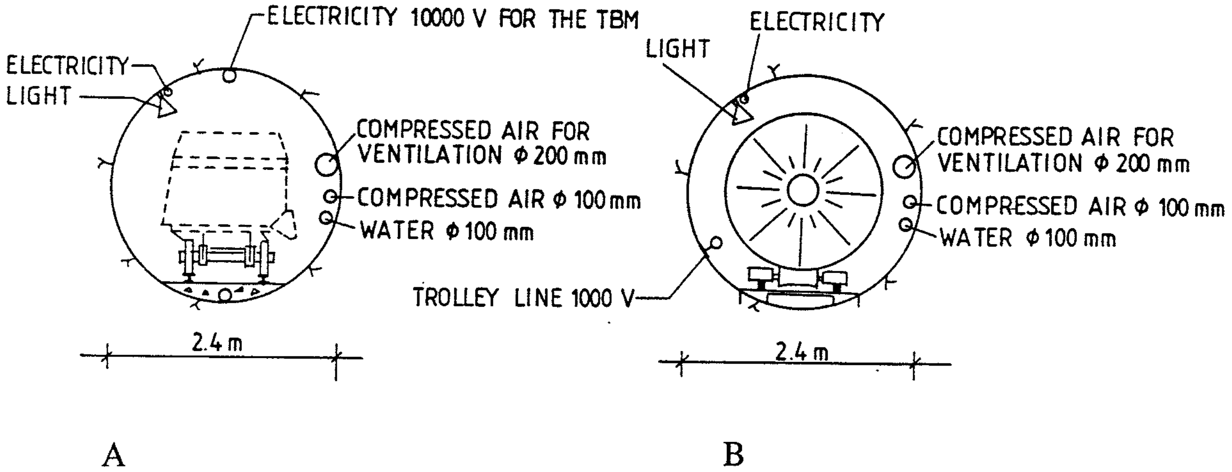

Figure 9-7 Furnishing of the deployment tunnels during construction, A and deployment, B

9.4 Geological aspects of tunnel boring and support

The full-face boring machines of today can manage all types of rocks. Development is moving towards stronger machines, and in 10-20 years the performance will be less dependent on rock types. In the future it will probably be standard to have connected drilling machines for predrilling, radar investigations and for pregrouting.

The most troublesome complication forseen for a TBM is if the rock pressure deforms the tunnel quickly and causes the machine to become stuck. This may be solved by a shielded (= not open) TBM, where rock support could be carried out directly behind the cutterhead if needed between the ribs of the shield. At the actual time of tunneling, the borehead can possibly be designed with a variable size, and it would then be possible to enlarge the diameter if part of the area includes unstable zones with a tendency to decrease the tunnel area. Problems could arise because the wall can start creeping after the passage of the machine. In such locations it would be an advantage to reverse the machine afterwards and enlarge the tunnel.

Tunnel diameters should be the same throughout the entire section where deployment is planned. This implies that all rock support except bolting needs to be carried out in a slot constructed in the tunnel wall.

9.5 Sealing of the deployment tunnels

The main purpose of sealing the rock surrounding the deployment tunnels is to reduce the water flow around and along the repository during its lifetime. A reduction of inflowing water will also reduce the cost of drainage pumping and facilitate the deployment.

In order to tighten the rock, it is proposed to systematically pregrout the rock with cement or a mixture of cement and bentonite. Sealing with pregrouting is more effective and comparatively cheap compared to post-grouting. Acceptabel level of inflowing water is discussed in chapter 10.

Where the tunnel crosses larger fracture zones it is proposed that such fractures should be sealed with grouting and bentonite blocks in a brickwork as suggested by Clay Technology. In order to reduce the water flow along the tunnel, a one metre deep slot could be cut around the tunnel by a disc cutting machine and filled with bentonite blocks. Depending on the quality of the near field rock, bentonite plugs will also be arranged at regular intervals in order to reduce the water flow along the deployment tunnels.

If the deployment of canisters is terminated for any reason the tunnel will be plugged by different methods depending on the expected time of the furlough. Three different methods are suggested:

- Furlough 0-2 days	Plastic cover
- Furlough 2 days-1 month	Bentonite plugs coated with asphalt
- Furlough 1-12 month	Mechanical packer
- Furlough more than 12 month	Concrete plugs

Each package of bentonite and canister should be finished when a stop longer than a few hours is expected. The end of a package should be a vertical wall, which is temporarily covered with some plastic cover to prevent water from dripping along the end face.

When the stoppage is longer than two days an extra 0.5 m block layer should be put in front of the surface. The vertical wall from these blocks should be sprayed with asphalt or any other material, in order to cover the wall and prevent water from contacting the bentonite. After the stoppage the cover should be removed and another 0,5 m block layer put in position.

The design of the bentonite plugs is described in Chapter 10.

A mechanical packer will be anchored to the tunnel wall by hydraulic grips that will be pressed into the shallow slots in the tunnel wall created by the tunnel boring machine. Bentonite blocks will separate the packer and the waste canister. It should be fairly straight forward to design a packer that could withstand the pressure from the hydraulic head and the swell pressure from the bentonite.

Concrete barriers exposed to high pressures are commonly used in hydropower stations and in civil defence facilities. In the experimental facility for the storage of natural gas in lined rock caverns at Grängesberg a concrete barrier has been exposed to pressures of up to 30 MPa with no documented movements. The barrier is molded in a circular slot in the tunnel and the high pressure is transferred to the bedrock. The rock surrounding the barrier is tightened by grouting. Grouting is also needed in the contact zone between concrete and rock before the barrier is exposed to pressure. The canisters are separated from the barrier by bentonite blocks. The required length of the barrier for a pressure of 10 MPa has been estimated at about 8 m.

9.6 Critical events during construction and deployment

This feasibility study has shown that it is possible to construct and deploy canisters with high level radioactive waste in long drilled tunnels. A detailed risk analys will be a part of the design phase. The ambition in this chapter is briefly to put forward some items that needs to be considered during different parts of the project. It is important to use the risk analysis in an active manner in order to eliminate or reduce hazardous events at an early stage.

The consequence of any hazardous events will increase when the project goes from the investigation to the construction phase and to the deployment phase. Early knowledge and warnings should be used to avoid risks later in the project.

During investigations

The main concept put forward in this report implies an off-shore location. Investigations for the concept might be troublesome and costly, due to both problems with core-drilling and surface investigations. Covering layers of sediments (i e clay, sandstone, shale) above crystalline rock may also disturb information like fracture zones within the deployment rock. A step-by-step procedure is therefore suggested in which the geological data base is continuously updated and the layout is adapted to the new prerequisites encountered during the construction period.

During construction

As the construction works proceeds, all kinds of rock technical problems may occur such as rock falling out into the tunnel, rockbursts and water inflow. These are normal construction problems which can be solved by the contractor. Normal techniques for solving this problems are the use of rockbolts, shotcrete and cement-, bentonite- or polymergrouting into the rock. At zones containing clay or swelling rock, concrete support structures may also be necessary.

All work in the repository is designed for a standup time of at least 20 years.

The design of the repository demands a double exit system with a ramp and a vertical shaft. This is also favourable for the construction works which will proceed for about 8 years.

During deployment

The most critical part of the repository lifetime is the deployment phase. Problems during the previous stages can always be attended to in a constructive way. If the deployment starts and anything goes wrong, the considerations concerning the radioactive waste are of prime importance. Limited time and little space around the waste canister will make it difficult to solve various problem in the deployment tunnels.

Failure in the concept may be due to the transport system, supply system or rock failures.

The transportation down and into the repository area will be steered by rails or guides on the walls. The vehicle is equipped with at least two parallel systems for braking and an emergency breaking system. It also has hydraulic jacks to lift it back onto the rails if the vehicle is derailed or stopped for any reason.

The risk of major rock falls down into the tunnel will be minimized by a welldesigned rock support during the construction and continuous inspection during both the construction and deployment period. Small pieces of rock could be pushed away from the rails by the vehicle used or by the personnel.

The supply system consists of supply for the deployment (electricity) and for the service (light-electricity, pumping and ventilation). If the 1000 V supply for the transport system fails the brakes on the vehicle will automatically engage. If the service system fails a reserve system will be turned on.

The water inflow at this stage is controlled by earlier grouting and leachate will be pumped to the surface.

After deployment

After the deployment, the deployment tunnels will be totally filled with bentonite. The other rock caverns like the trans-shipment station will be filled with a mixture of sand and bentonite. Before sealing ,the tunnels and rock caverns will be defurnished in order to avoid corrosion and generation of hydrogen. The ramp, vertical shaft and investigation tunnel under the deployment might be open for investigations during any requested time after the deployment period.

10. NEAR FIELD SEALING AND BEHAVIOUR

10.1 Introduction

The concept of waste storage in long drilled tunnels differs from the KBS-3 concept in three basic ways with regard to the near field behaviour:

A) The temperature fields caused by the waste do not interfere, which means that the temperature pulse is short and the thermal conductivity of the bentonite is important.

B) The tunnels are drilled, which means two things:

1. There is no disturbance caused by blasting of the rock around the tunnel.

2. The disturbance of the rock, caused by stress release, is smaller since the tunnel is circular and the risk of tensile stresses occurring is small.

C) The deposition tunnel is horizontal and a large inflow of water might cause problems during deployment.

Since the disturbance of the near field rock is smaller, the permeability of the disturbed zone is lower, as well as the water flow parallel to the tunnel. However, even during drilling there is a disturbance in the rock and the extension and effect of this disturbed zone must be considered.

These differences will be emphasized during the description of the near field behaviour.

10.2 Water Flow

The near field behaviour can, with respect to the water flow, be divided into three stages with different behaviour characteristics. The first stage represents the situation during the deposition. The second stage represents the conditions after completed deposition but before the bentonite is saturated and homogenized. The third stage refers to complete saturation and homogenization, meaning that the water flow in the near field has reached steady state conditions. The time required for the different stages is mainly a function of the permeability of the rock and the technique of application.

10.2.1 During deposition

If the average permeability of the rock is below 10^{-9} m/s the average inflow will be below 60 liters per day and metre of tunnel (calculated assuming a steady state situation with 5 MPa water pressure at a distance of 100 m). Directly after drilling the inflow will be higher, but steady state is assumed to be reached before deposition.

The water will not be evenly distributed along the tunnel surface but will enter the tunnel through fractures that can be distributed over the rock surface in several ways. If the fractures are fairly evenly distributed, the total inflow along 6 metre of tunnel (containing one canister) will be 360 litres per day. If the inflow is dominated by fractured zones, for example with a spacing of 100 m, the inflow from one zone can be several m^3 per day. Such a zone must be avoided or sealed off because the water flow will be too large for practical reasons at deposition.

For practical reasons an inflow of more than about 250 litres per day along the entire 6 m canister cannot be accepted. This means that the average hydraulic conductivity in a canister section must not exceed $k = 10^{-9}$ m/s. The practical difficulties are greater if all water enters at one spot than if the water is well distributed, and the value of 250 litres per day is therefore only approximative. From one spot a maximum of about 50 litres per day should be accepted. This corresponds to about 0.5 cm^3 per second, which is about a few drops per second.

Emplacement description

If the rock is dryer than the limits described, there will be no problems with emplacing the canister and the bentonite barrier. A description of the emplacement and the behaviour just after emplacement will be given assuming a maximum water inflow of 50 litres per day from one spot and a total inflow of 250 litres per day along one canister section.

Since the tunnel is slightly inclined upwards the water will be drained backwards and there should be no significant accumulation of water at the front. The proposed transport and handling systems will work, even though there may be some water at the bottom of the tunnel.

It should be possible to emplace the bottom layer, the canister and the top layer without any problems with the suggested transportation system. This means that the bottom layer will only be exposed to dripping water for some hours until the canister is emplaced and this can be accepted.

With these technique, it should thus be possible to handle the limited amount of water that is allowed to enter from the rock if there is no delay after emplacement of the canister. A delay before emplacement of the canister (e.g. caused by wagon failure) can be taken care of by exchanging the emplaced blocks, while a delay in emplacing the final blocks, might cause problems. A special action plan must be prepared for such incidents .

If the concept with a water saturated bentonite barrier is used, the slots will be filled with a bentonite slurry (or with water). It is proposed that the filling should take place after the emplacement of 3-5 canisters. It will be preceded by applying a ring of stiff plastic slurry in the slot around the last blocks emplaced. This ring is intended to stop the slurry from flowing out and must thus be stiff enough to withstand the slurry pressure that might be built up by the inflowing water. The disturbed zone around the tunnel will prevent high slurry pressures, but if the pressure is expected to be too high at certain sections, an extra one metre thick bentonite wall fitting well against the rock can be built, possibly in combination with cutting a slot in the rock.

10.2.2 After deposition

The buffer behaviour after deposition but before equilibrium is, of course, dependent on whether an initially saturated buffer is used or not.

10.2.2.1 Unsaturated bentonite buffer

Water inflow

If no water is added artificially to the slot, the average hydraulic conductivity of the surrounding rock will determine the time for filling up the slot. It is, of course, impossible to forsee the conductivity of the rock in the repository, but the following estimations can be made:

If $k=10^{-10}$ m/s and the water pressure in the rock is assumed to be 5 MPa at a distance 100 m from the tunnel, the inflow will be 6.4 litres per day and metre of tunnel. If the slot between the tunnel wall and the compacted bentonite is 5 cm, it will take about two months to fill the slot. If $k=10^{-11}$ m/s the slot will be filled in about 1.6 years. Table 10-1 shows the influence of the rock permeability.

Table 10-1 Time to fill the slot with water at different rock permeabilities

k m/s	time
10^{-12}	16 years
10^{-11}	1.6 years
10^{-10}	2 months
10^{-9}	1 week

Since $k < 10^{-11}$ m/s is not very probable, the time will most likely not exceed a couple of years unless the temperature and stress release effects strongly decrease the radial permeability.

<u>Saturation process</u>

The unsaturated bentonite barrier is assumed to be constructed from bentonite blocks with an initial bulk density ρ and water ratio w:

$\rho=2.17$ t/m
w=10%

corresponding to the initial void ratio e and dry density, ρ_d :

e=0.369
$\rho_d=1.97$ t/m

If the average slot is 5 cm and the bored tunnel and canister are 2.4 m and 1.6 m in diameter respectively, the watersaturated and expanded bentonite will have the following parameter values:

e=0.609
$\rho d=1.68$ t/m
$\rho m=2.06$ t/m (density at saturation)
w=22.4%

This means that the increase in water ratio until saturation will be:

$\Delta w=12.4\%$

It also means that the volume of water required to fill up the slot and the empty pore space in the initial bentonite per metre of tunnel is:

slot:	$\Delta V=0.37$ m
bentonite:	$\Delta V=0.15$ m
total:	$\Delta V=0.52$ m

The water uptake and saturation process of the bentonite can be simulated as a diffusion process with the coefficient of "water diffusion":

$\Delta w = 0.3 \cdot 10^{-9}\ m^2/s$

If water is assumed to be available in unlimited quantities at the rock surface, a diffusion calculation of the saturation process can be made. Figure 10-1 shows the calculated water ratio as a function of the distance from the rock at different times.

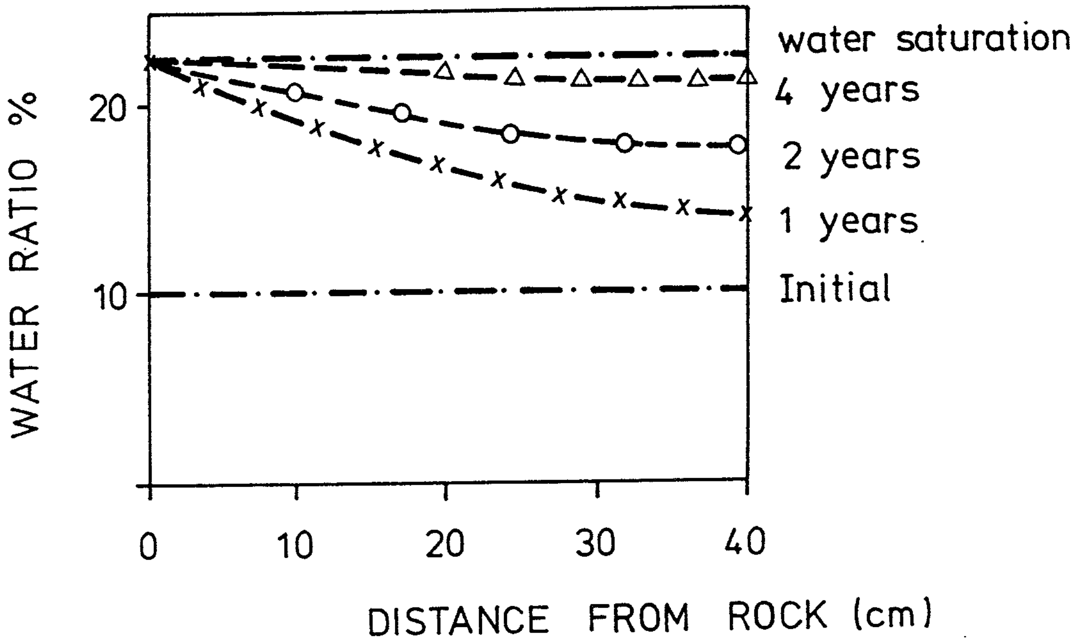

Figure 10-1 Calculated water ratio in the bentonite barrier as a function of the distance from the rock at different times if unlimited amounts of water are assumed to be available at the rock surface. Unsaturated bentonite concept.

If the inflow of water is large enough to fill the slot with water within some months, the average degree of saturation will be increased from Sr =55% to Sr =84% or from w=10% to w=18.8%, which means that the amount of water in the slot will be enough to support the process shown in Figure 10-1 for about two years. At the end of two years the rate might be lower than that shown in the figure.

Swelling pressure development

The swelling pressure will be a function of the saturation process and will thus depend on the rate of water inflow into the tunnel. If the near field rock has an average hydraulic conductivity of $k=2 \cdot 10^{-11}$ m/s and the saturation process shown in Figure 10-1 is assumed to be valid the swelling pressure development can be estimated as shown in Figure 10-2.

However, the estimate has been carried out with no respect to the need for swelling. It is reasonable to believe that the swelling will delay the pressure development by a factor of 4, which is indicated in the figure. The final swelling pressure in a saturated state will be about 8 MPa if the water in the rock has a low salt content and if the temperature in the bentonite is low enough not to affect the bentonite properties.

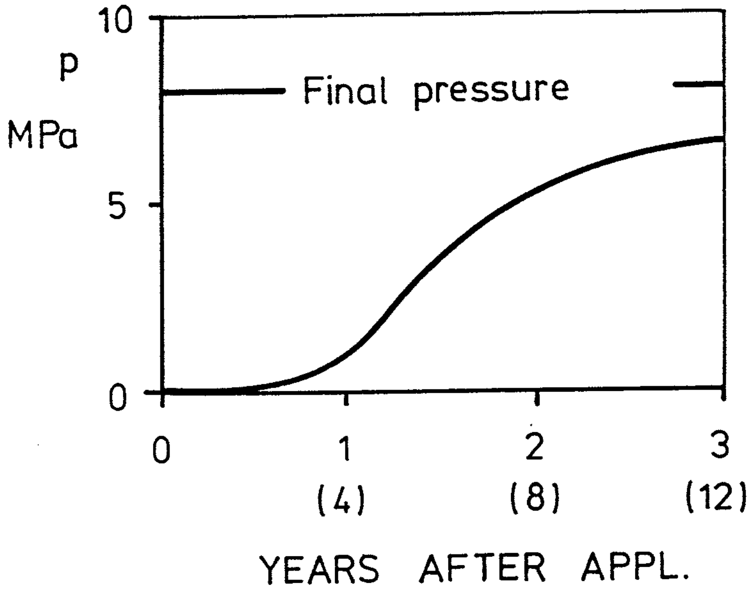

Figure 10-2 The estimated average swelling pressure p in the clay barrier as a function of the time elapsed after storage. The original time scale is from the calculations, while the time scale in brackets is obtained after correction for swelling. Unsaturated bentonite concept.

Water pressure development

The water pressure development in the buffer and surrounding rock will primarily depend on the following factors:

1. The hydraulic conductivity of the rock.
2. The hydraulic conductivity of the disturbed zone around the tunnel.
3. The rate of emplacement.
4. The sealing activities in the near field rock.
5. The influence from a possible survey tunnel.

The disturbed zone will probably keep the water pressure low one or two hundred metres from the latest deployed canister if the near field rock is not sealed. Further, the water pressure will increase as soon as the slot between the buffer and the rock has been filled. The disturbed zone will probably ensure that the slot will be filled at a similar rate along the tunnel. This means that if k is larger than 10^{-10} m/s in the rock, the water pressure will start to increase after some months and reach its natural level within a year unless the survey tunnel is too close to the deployment tunnel. However, the water pressure in the buffer will not reach the same level until it is saturated.

10.2.2.2 Saturated bentonite buffer

Homogenization process

Since the bentonite barrier is water saturated from the start, no inflow of water will take place after emplacement. However, there will be an internal redistribution of water in the barrier when the water in the slurry is taken up by the swelling blocks.

If the values from the preliminary tests are used as a basis, the initial data on the bentonite blocks at deposition will be:

$\rho=2.08$ t/m^3
$S_r=95\%$
$w=21\%$

The corresponding initial void ratio e and dry density ρ_d are:

$e=0.586$
$\rho_d=1.76$ t/m^3

The slot between the tunnel and the bentonite blocks is assumed to be filled with bentonite slurry with the following water content and densities:

$w=400\%$
$\rho=\rho_m=1.15$ t/m^3
$\rho_d=0.229$ t/m^3
$e=11.16$

With an assumed average slot 5 cm wide, a tunnel diameter of 2.4 m and a canister diameter of 1.6 m, the homogenized barrier will have the following average parameter values:

ρ_d =1.54 t/m^3
ρ_m=1.99 t/m^3
e=0.817
S_r=98%

The density ρ_m =1.99 t/m^3 is well within the range of acceptable densities. However, the technique should be tested on a larger scale and the possibility should be investigated of producing a higher initial density.

It should be possible to produce bentonite blocks with an original water content of w=15% and a degree of saturation of 90-95%, which means a dry density of ρ_d =1.9 t/m . It should also be possible to reduce the water ratio of the bentonite slurry to w=300%, by, for example adding 0.5% salt. Using these materials and an assumed average slot width of 4 cm, which should be possible if the blocks are individually emplaced, the average density after homogenization will be:

ρ_d =1.74 t/m^3
ρ_m=2.12 t/m^3

These densities are average values. Due to internal friction in the clay, the density will be lower in the outer part near the rock than close to the canister.

Swelling pressure development

The time for homogenization and the resulting swelling pressure development can be roughly calculated using an approximate stepwise swelling procedure. Figure 10-3 shows the result of such a calculation. The swelling pressure against the rock wall is plotted as a function of the time after deposition . Since this process is independent of the water entering from the rock, the calculation can be made more accurately by using FEM.

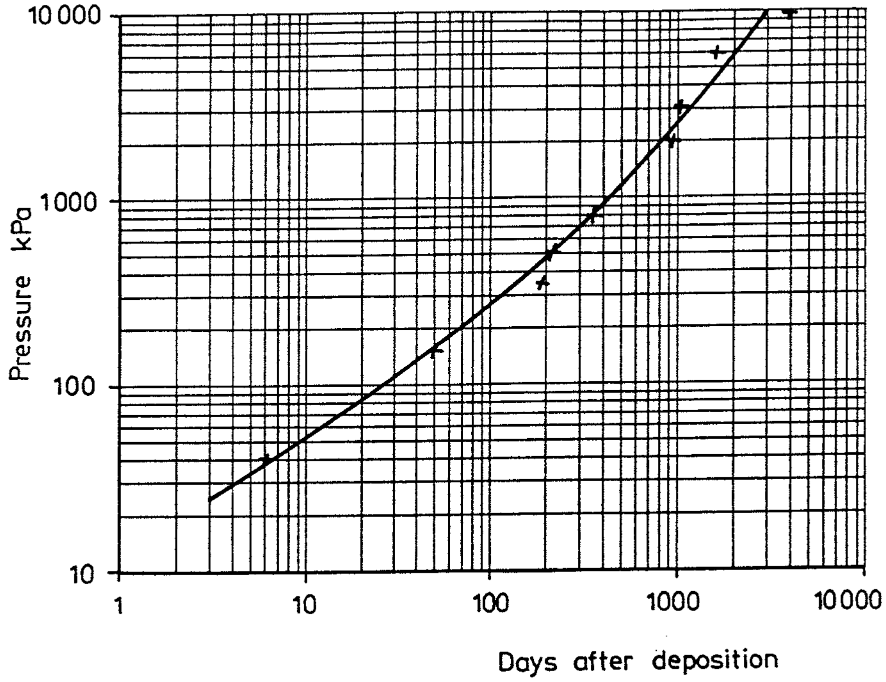

Figure 10-3 Estimation of the development of the swelling pressure from the bentonite barrier against the rock during the homogenization process. Saturated bentonite concept.

According to the calculation, the homogenization and the resulting swelling pressure against the rock, with the final value 10 MPa, will be completed in 8-10 years.

Water pressure development

Since almost no water can enter the tunnel, the increase in water pressure in the rock as well as in the bentonite buffer will start when the following two requirements are fulfilled:

1. The emplacement front is so far away that the disturbed zone will not drain off all the water.
2. Either the homogenization has proceeded far enough to make the bentonite in the slot withstand the water pressure, or an extra bentonite wall has been built at some sections.

The behaviour of the near field after emplacement but before the entire tunnel is filled is complex. The need for and function of recurrent bentonite walls should be further studied, as well as the extension and the properties of the disturbed zone around a bored tunnel.

If proper protection against water leakage in the disturbed zone and along the bentonite/rock slot is achieved, the water pressure in the rock and the bentonite will be built up within months. If such a protection is not achieved or considered desirable, the water inflow might increase substantially at the emplacement sections.

10.3 Behaviour of near field rock

The conductivity for water and gas of the nearfield rock, i.e. the rock around deployment holes and tunnels, is an important factor for the transport of corrodants and radionuclides in repositories, and it has been demonstrated that blasting, however carefully done, and stress release will increase the porosity. Full-face drilling intended for excavation of VLH:s is associated with less, although still not completely negligible, rock disturbance. The temperature pulse, or rather the heating/cooling cycle caused by the radioactive decay, will influence the fracture apertures to a significant extent irrespective of the excavation technique.

Effects on the near field rock are expected from four types of disturbance:

- Disturbance caused by fullface drilling of long tunnels.
- Disturbance caused by stressrelease resulting from excavation of the tunnel.
- Disturbance caused by internal tunnel pressures, i.e. the swelling pressure of the clay barrier.
- Disturbance caused by the heat production of the decaying waste fuel.

Disturbance caused by full-face drilling of long tunnels

The damage is caused by the high thrust force at the front and by the shattering generated by the drill cutters. If consideration is given first of all to the high load that is exerted on the rock, it can be seen that a thrust load of a few thousand tons transferred to the front of a 2.4 m diameter tunnel yields an elasto-plastic displacement of the front by around 1 to 2 mm. Most of this displacement is assumed to be due to elastic compression of wider fractures of long extension, but some of it is caused by permanent, plastic strain in the form of block movements associated with shear along pre-existing fractures and the creation of new fractures. This latter effect can be assumed to appear in the type of zones indicated in Figure 10-4, where it contributes to the increased frequency of fine fractures (fissures) that are caused by the high stress concentrations that always prevail at the "corners" of holes of any size in stress fields of high intensity.

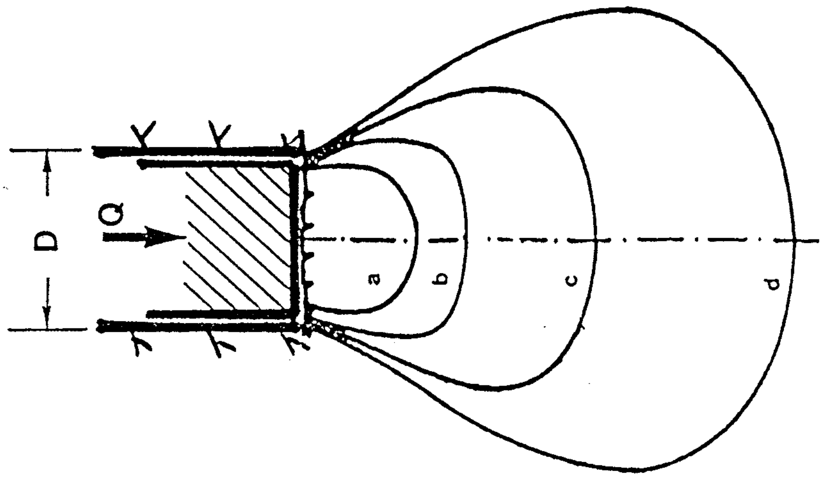

Figure 10-4 Influence zones of loading within which the generated normal and shear stresses may induce permanent structural changes.

a) Strong b) Moderate c) Slight d) Minor

Quantitative estimates of the extension of the zone adjacent to the wall of a full-face drilled tunnel where significant disturbance is expected to take place have yielded the figure 5 - 15 cm for diameters of about 1.5 m (1), which is also assumed to be representative for the planned 2.4 m diameter tunnels.

In addition to the thrust-induced disturbance, there will also be mechanical damage caused by the fragmentation process. Referring to previous studies where the influence of the size of buttons and the detailed shear failure leading to successful fragmentation were investigated, it can be assumed that the rock will be rather richly fissured to a depth of say 2 to 5 cm from the periphery. Actually, the photograph in Figure. 10-5 serves to illustrate that the break-up of the shallow rock may well be in the range of 5 - 15 cm.

Figure 10-5 Photograph of the full-face drilled "Saltsjö" sewage tunnel. Notice the breakup of the rock surface

It has been concluded that the combined damaging effect of unloading, loading and fragmentation produces an enhanced hydraulic conductivity of the rock close to the periphery. Taking the average hydraulic conductivity of the virgin rock to be 10^{-11} m/s, the estimated net conductivity within about 1 to 2 decimetres from the periphery can be roughly estimated at 10^{-10} m/s, while the most shallow, 2 to 5 cm deep part, is expected to receive an average conductivity of around 10^{-9} m/s.

Disturbances caused by stress release, internal pressure and temperature

The disturbances caused by stress release, internal pressure and temperature will be discussed on basis of experiences from e.g. the Stripa tests and different distinct element calculations (UDEC, 3-DEC).

The disturbance from stress release can be quite high if some fractures in the fracture system are oriented almost parallel to the drift. In such a geometry the hydraulic conductivity parallel to the drift might increase up to 1000 times in the outer ≈0.3 m of the rock. If all fractures are oriented with an inclination of more than 15-20° to the axis of the drift, the disturbance is much less and the increase in hydraulic conductivity may be as low as a couple of times. The increase in hydraulic conductivity deeper into the rock than 0.3 m from the surface, is probably less than 5 times in any structure.

The influence of the swelling pressure from the bentonite and the temperature increase is probably low compared to the influence of the stress release, since these processes rather tend to close the fractures than to open them. However the slow decrease in temperature, starting after about 10 years, might effect the rock in a negative way. Inelastic shear during the temperature increase that is not reversed during the temperature decrease, might open some critically oriented fractures.

10.4 Sealing of the near field rock

Water flow in the near field

While the water flow before equilibrium is speeded up by high hydraulic gradients, the situation is quite different after equilibrium. The low gradients after saturation (in the order of 10^{-2}) make the water flow very slow around and through the repository. After swelling, saturation and homogenization the hydraulic conductivity of the clay barrier will be between $k=10^{-14}$ m/s and $k=10^{-12}$ m/s depending on the salt content in the pore water, the temperature and the final density. The average permeability of the rock is higher than that of the clay, especially in fracture zones and in the disturbed zone surrounding the tunnel. A possible flow pattern around a tunnel can be expected to be as shown in Figure 10-6 with the disturbed zone connecting the natural fracture zones.

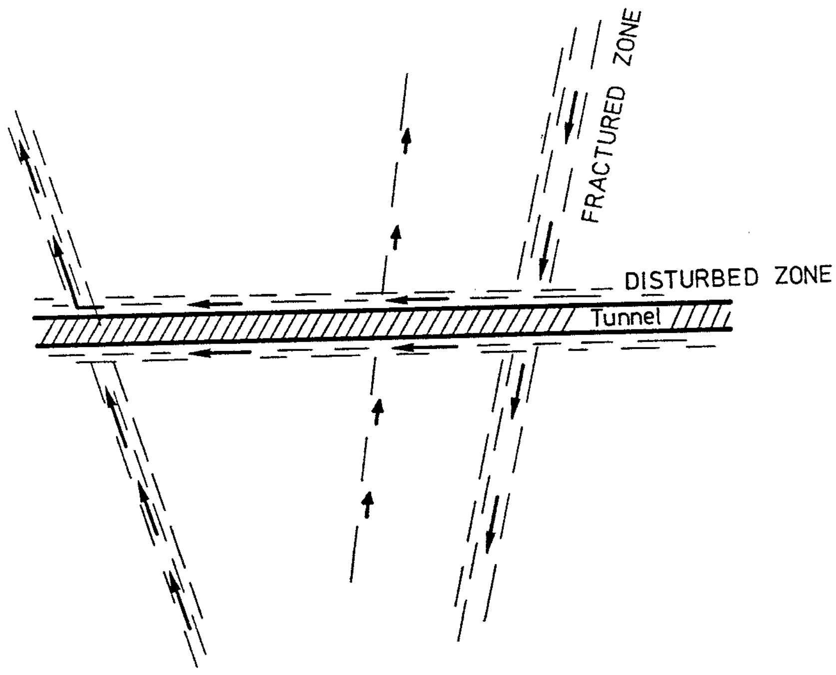

Figure 10-6 Possible flow pattern around a deposition tunnel

Sealing activities

Minimizing water flow in the near field retards the degradation of the buffer and the transport of radionuclides that may ultimately escape from the canisters. This can be achieved by sealing off water-bearing parts of the rock in the following ways:

A Reduce inflow from intersected wide fracture zones into the tunnel and the circumscribing disturbed zone by cutting about 1 m deep slots into the fracture zones and filling the slots with highly compacted bentonite (HCB). Additional sealing is preferably made by grouting the zones by injecting suitably composed cement or clay mixtures into closely spaced radially oriented boreholes drilled from the base of the slots. Alternatively, the slots and the grouting curtains can be placed on each side of the intersected natural fracture zones.

B. Reducing inflow into the tunnel from intersecting, thin natural fracture zones by grouting the rock from the tunnel using megapacker technique.

C. Preventing axial flow in the disturbed zone by cutting slots at appropriate locations and filling them with HCB. These seals should preferably be located where the rock is poor in fractures and where the slots effectively cut off long-extending fractures formed by "wedges". At the same locations, the tunnels should be plugged with HCB blocks arranged as brickwork, see Figure 10-7.

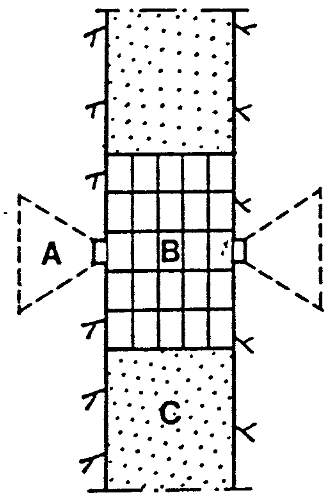

Figure 10-7 Schematic illustration of slot with HCB and grouted zone A continued with an HCB plug B (denoted deployment zone).

HCB plugs can be arranged at any place in the tunnels to cut off axial flow. They can be applied with regular spacing, for instance between each set of 3-6 canisters, to make it possible to inject grout into the space between the bentonite-surrounded canisters and the rock, and they are suitably applied where stops longer than a few weeks occur in canister emplacement.

A general view of the various sealing options is presented in Figure 10-8, the overall philosophy being to create stagnant groundwater conditions in the near field.

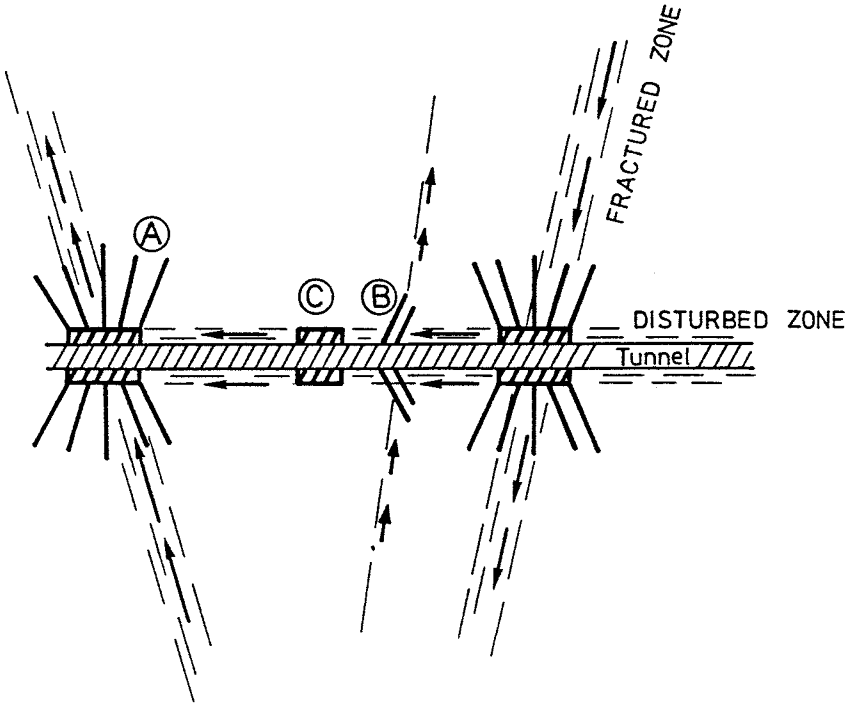

Figure 10-8 Sealing of the permeable zones in order to diminsh the water flow in the near field

10.5 Bentonite degradation

Temperature calculations show that the bentonite will be exposed to high temperatures for only a short time. If the bentonite can sustain temperatures exceeding 100°C for 10-50 years, up to 40% more fuel elements can be stored in each canister. The influence of high temperatures on bentonite is thus an important issue. These temperature effects are presently being investigated in an extensive research program, and the following recommendations can be done:

Temperatures exceeding 120-130°C will create brittleness and a reduced ability to swell and self-heal, and also make the smectite particularly sensitive to conversion to non-expanding hydrous mica. Current know-how indicates that 120°C should be set at a maximum temperature level even for very short heating periods. A safe recommendation is therefore to aim at a maximum temperatur of ~ 100°C in the bentonite.

Applying this criterion, it can be seen that although degradation to hydrous mica is unevitable, significant alteration will take millions of years under stagnant groundwater conditions, which are offered by the VLH concept to a much greater extent than the KBS-3 concept. It is concluded that sealing of the near field rock is essential to approach a stagnant state and the matter should therefore be further investigated. It should also be added, that location of the repository in rock with a low content of potassium-bearing minerals such as feldspar microcline is to be preferred.

10.6 Thermomechanical effects on buffer and canisters

Heating up the saturated system of canister and clay will create a combination of thermal expansion and thermal stresses in axial as well as radial directions. Since the rock mechanical considerations have not taken these effects into account, they will be briefly analyzed in this chapter. The maximum expansion (at an assumed free boundary) and the maximum induced stresses (at an assumed fixed boundary) can be estimated.

Canister

The canister will expand axially about 8 mm and radially about 1 mm at an increased temperature of 100°C or create stresses of up to 200 MPa (if no strains are allowed). The canisters should thus be allowed to expand axially which will be the case if the 5.9 m long canisters are emplaced at c/c 6.0 m, giving a minimum space of 10 cm between the canisters. If the bentonite blocks between the canisters have an initial density that is a little lower than the average density of the outer barrier, it should be possible for the canister to undergo the necessary expansion.

Clay barrier

The temperature increase will also expand the clay barrier. The radial expansion will be 2.2% or 9 mm at a temperature increase of 100°C or 10 mm if the radial expansion of the canister is included. Such expansion cannot be forced on the rock but will induce stresses of up to 50-100 MPa. The expansion of the clay is primarily caused by expansion of the pore water and the very high stresses can only be avoided if the excess amount of pore water can leave the clay.

The temperature calculations and the homogenization calculation show that the maximum temperature will be reached after about 8 years, which is almost the same time that it takes for the clay to homogenize. This indicates that the temperature-induced pore pressure will have time to dissipate, although a complete calculation of the thermomechanical scenario should be made.

10.7 Local and "global" swelling of the buffer

Swelling of the clay barrier in the axial direction can take place in the event of excess water. It can either be in the form of local swelling in the free bentonite surface if water is dripping on the surface or as global swelling between the canisters if the shear resistance between the rock and the clay is too low.

Local swelling

A temporary stop of the deposition process may cause some local swelling problems on the free bentonite surface if the stop is longer than a few days. If such a stoppage is foreseen, an extra 0.5 m block layer should be put in front of the surface and covered with a thin layer of asphalt or plastic. When deposition starts again the cover should be taken away and another 0.5 m block layer should be placed in position.

The end of each package should be a vertical wall, which is temporarily covered with some plastic cover to prevent water from dripping along the end face.

Global swelling

The risk of global swelling is greater between the canisters than along them due to additional shear resistance between the canister and the clay. The risk is higher for the canisters stored last and second to last than for the other canisters emplaced previously because of successively increased shear resistance.

An estimation of the possible global swelling can be made. If the friction angle between the clay and the rock is assumed to be 10° and the swelling pressure is assumed to act instantly on the rock, a simple static equlibrium equation shows that swelling can only take place up to 7 metres from the surface, which means that only the last canister can be moved and that the displacements hence are very small. However, the friction between the clay and the rock is much smaller at the beginning since the swelling pressure will not be fully developed until after about 8 years. On the other hand, it will take a long time for the swelling process to spread all the way to the centre of the tunnel.

A rough idea of the swelling and its time dependence can be achieved if the swelling is assumed to take place in a 0.5 meter thick slice of the 2.4 metre diameter tunnel and the shear resistance from the rock/clay interface is assumed to correspond to half the swelling pressure. The results of a simplified calculation on this lines are shown in Figure 10-9. According to this example displacement of the canister stored last is only a few mm after 1 year and a few cm after 100 years.

However, this process is very complicated and should be carefully investigated with the aid of FEM calculations.

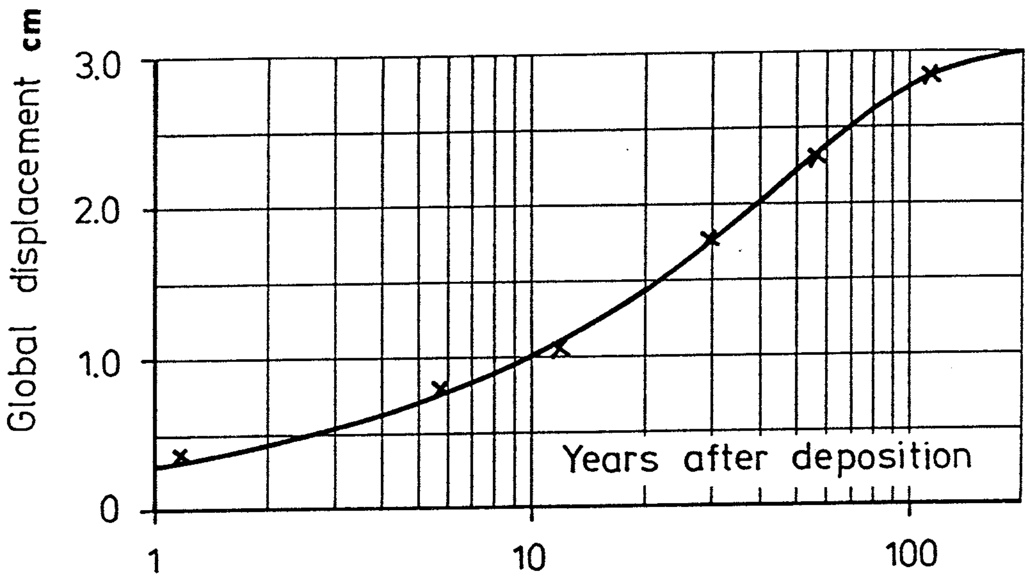

Figure 10-9 Estimated global displacement of the outer canister package

11. TRANSPORT AND HANDLING OF CANISTERS AND BENTONITE BLOCKS

11.1 Transportation down to the repository level

A possible transport system for canisters from an Encapsulation Station for the canisters down to the final repository in tunnels must be safe and easy. All vehicles and lifting systems should be tested in advance and safety systems, such as brakes, must at least be doubled. If anything goes wrong, there must be space for repairing.

The transport vehicles will use the electric trolley system installed during the construction works.

The transportation will be separated into two main parts:

- Transport from the Encapsulation Station down to the level of the repository.
- Transport from the area of trans-shipment into the repository tunnel.

The transportation from surface and down to the repository level will be carried out by a specially designed wagon running on the rail system already used during construction. Various driving techniques are available, and it is important to have a double braking system. An emergency system is also needed. The high load will be solved by fitting the vehicle with a large number of wheels. Similar transport systems are available on the market for use in mines and for construction purposes.

At the trans-shipment area, an overhead crane will be used for lifting the canister from the bogie-platform over to a wagon designed to fit the repository tunnels.

11.2 Transportation and deployment at the repository level

The transportation between the trans-shipment station and into the tunnels requires a great deal of engineering work before a definite method can be established. In this report, one basic concept consisting of a wagon on rails are suggested for further consideration. The study has also shown,which is a crucial question for the total concept, that it is possible to design a safe and practical transportation system to be used for heavy loads in a small circular tunnel.

Other systems considered are a wagon on hard rubber wheels, a wagon on air-bearing elements, deployment of maxi canisters or the use of an overhead crane that moves on two steel beams anchored to the tunnel walls.

Wagon on rails

The canister with an outer diameter of 1,6 m and the tunnel with a diameter of 2,4 m give a cylindrical space of 40 cm in which the equipment for transportation and handling of the material has to operate. The space has to be filled with bentonite before the deposition is finished.

The transport system proposed by ABB-ATOM consists of different wagons pushed by a truck on rails, see Figure 11-1. The canister and bentonite wagons and the truck run on a track installed on the bottom of the tunnel. The track has two rails, each one wide enough to allow the wagon wheels to move sidewise in the tunnel bends. A width of about 15 cm is sufficient for tunnel bends with a radius of 50 m. In this way, the wagons can be made of one stable frame, without bogies which would require more space than is available. The deposit wagon may be formed to run in the recess between the two rails. The wheels of the canister and bentonite wagons are spring mounted, which permits a certain unevenness in the rails. The rails are made of profiled steel sheets, with a suitable length, preliminary about 1,5 m, which prevent the distance to the bentonite block bed from deviating above a permitted maximum.

It is assumed that an operator will be placed on the truck, which has a shield for protection against radiation from the canister. It is also possible for the truck to be remote-controlled. Future development work may show that the two trucks can be designed as one truck, combining the necessary actions.

A similar system has also been suggested by IMATRA VOIMA OY from Finland

The transportation system consists of different wagons for transportation and deployment of the canister and for handling of bentonite blocks. The following vehicles will be used:

- Deposit wagon, which receives and holds the canister before it can be lowered onto a bentonite block bed. The canister is rolled on rolls, which are elevated mechanically or hydraulically. The wagon is formed as a continued part of the track in the method desribed on figure 11-1.

- Canister wagon, which transports the canister through the tunnel and in front of the deposit wagon, pushes it over to the latter, see Figure 11-1. The canister rests on rolls on the wagon. During transport the canister is prevented from moving by stop structures at the front and back end, manoeuvred from the truck. In its final position, the canister is moved by a hydraulic telescopic cylinder mounted on the truck.

- Bentonite wagon, which transports bentonite blocks into the tunnel and puts them into position.

- A service truck used for transportation of the wagons and for removing the rail and deposit wagon and possibly for manoeuvring the jacks. The truck is electrically powered via a cable drum and is fitted with all the equipment needed to control the wagons. All functions are controlled from the truck, which is provided with the necessary TV cameras and monitors.

The different steps in the procedure is shown on Figure 11-1. The description follows the drawing steps. The deposition cycle starts when the previous canister has been covered with bentonite, steps 8 and 1.

1. Step 1 shows the end of the tunnel with a vertical bentonite wall covering the previous canister. The deposition wagon is standing in front of the tunnel rail, ready to receive the canister. The walls are fitted with a copper bar on each side. They are an alternative for supporting the side bentonite blocks, as desribed below. Jacks for lifting the back end of the canister stand on each side of the wagon, but may alternatively be applied later together with the bentonite wagon.

2. The truck moves the bentonite wagon into the tunnel. The wagon straddles the deposition wagon, running on its rails. The deposition wagon does not prevent the work of the bentonite wagon. Bentonite blocks are moved from the rear of the wagon into a frame, which can rotate around the tunnel circumference. When in the right angle position, the blocks are pushed into position by telescopic cylinders on the wagon. Blocks are applied with this method:

   - to suit the inner end of the canister

   - as a bottom support for the inner end of the canister (in the figure indicated as 900 mm)

   - as a support on both sides of the deposition wagon along the whole length of the canister

   The latter blocks rest on the copper bars which prevents them from sliding down.

It may also be necessary to insert extra blocks between the canisters to adapt the canister positions to the actual tunnel appearence. Such blocks are handled in this step or in step 8.

The bentonite wagon may also put the jacks for the canister rear end in position, resting on the deposition wagon sides.

The resting of side blocks on copper bars should be discussed. In another solution the side blocks may rest in this step on the sides of the deposition wagon, which for this purpose should be fitted with expandable side supports. However, later on, when the wagon must be removed, other supports have to be considered.

Several other alternatives are also possible. The copper bars as above can be replaced by bolts in the rock. The blocks can also be threaded on metal bars, transferring the load from middle blocks to the inner and outer blocks, where the inner blocks rest on the inner bottom block and the outer ones on the jacks. These bars are removed by the wagon in the end of the procedure. Instead of bars the blocks can be inserted in cassettes of about 6 m length, but removal of the cassettes may cause difficulties. An other alternative implies blocks notched in such a way that the middle blocks rest on the inner and outer ones.

3. The truck takes the bentonite wagon back to the tunnel opening and switshes to the canister wagon, which has been loaded with a canister.

   The canister treatment before loading on the canister wagon is assumed to be organized in a way comparable with conventional transportation and is not presented here.

   The canister wagon is moved into the tunnel to the end of the track. The brakes are activated and the canister is pushed over to the rolls of the deposition wagon by means of the telescopic cylinder on the truck.

4. The front end of the canister is stretching out over the inner bottom bed. The middle and back end are resting on the rolls of the deposition wagon.

   The truck pulls the canister wagon out of the tunnel.

5. The service truck enters the tunnel, lifts the back end of the canister by expanding the jacks and lowers the rolls of the deposition wagon. The figure shows the maximum possible lifting height, but the canister will only be raised to allow the deposition wagon to be removed. Later studies will show if this raising is necessary, or if the height applied by the jack insertion is sufficient for all possible tolerances.

The service truck has a grip which catches hold of the track plates. They are piece by piece lifted up on the truck store position. Figure 11-1, picture 5 presents a solution where one long link of the track is removed, pulling the deposition wagon out from the canister place. The length of the link must be shorter than shown to adapt the canister positions to the actual tunnel appearence, e g 1.5 m as indicated above. The truck applies the deposition wagon at the end of the rail and forces the wagon rolls to elevate.

The presented method is made in order to raise the canister as little as possible and still get a grip of the deposition wagon. The wagon is in this case made as a piece of track with rolls, but an alternative is that the wagon is so narrow that it can run between the two rails of the track. In the latter case the removal of the wagon and the rail can be made as separate operations with the truck.

6. Step 6 gives the situation when the necessary track is removed - usually about 6 m - and the deposition wagon is placed on the spot for the new disposal.

7. The bentonite wagon is pushed into the tunnel by the truck, this time loaded with blocks for top and bottom of the canister. By means of the frame and telescopic cylinders on the wagon bentonite blocks are slided in below the canister one by one until the canister bed is completed. The wagon lowers the jacks so that the canister now rests on the bentonite bed. The jacks can now be removed.

8. The bentonite wagon fills the upper space over the canister in the same way. Finally the blocks fitting the gap between the canisters are inserted and the front bed of the next canister is formed. A new cycle can start.

The procedure above implies four trips into the tunnel for each canister disposal. As each trip takes a rather long time, especially for disposal in the farthest end of the tunnel, the ambition should be to reduce the number of trips.

Obviously one trip with the bentonite wagon can be sufficient as all bentonite work is made in a connected sequence, step 7, 8, 1, 2 and 3. A suitable design of the wagon store for bentonite blocks will enable this improvement.

An adequate design of the front end of the bentonite wagon may allow this wagon to execute the service truck activities. These activities are rather simple, but the bentonite wagon must be supplied with further tools and permit rail pieces to be stored parallel with bentonite blocks. The design seems to imply certain complications, but considering the advantages an effort should be made. A favourable result of these studies reduces the trips into the tunnel to two, which must be considered a practical minimum.

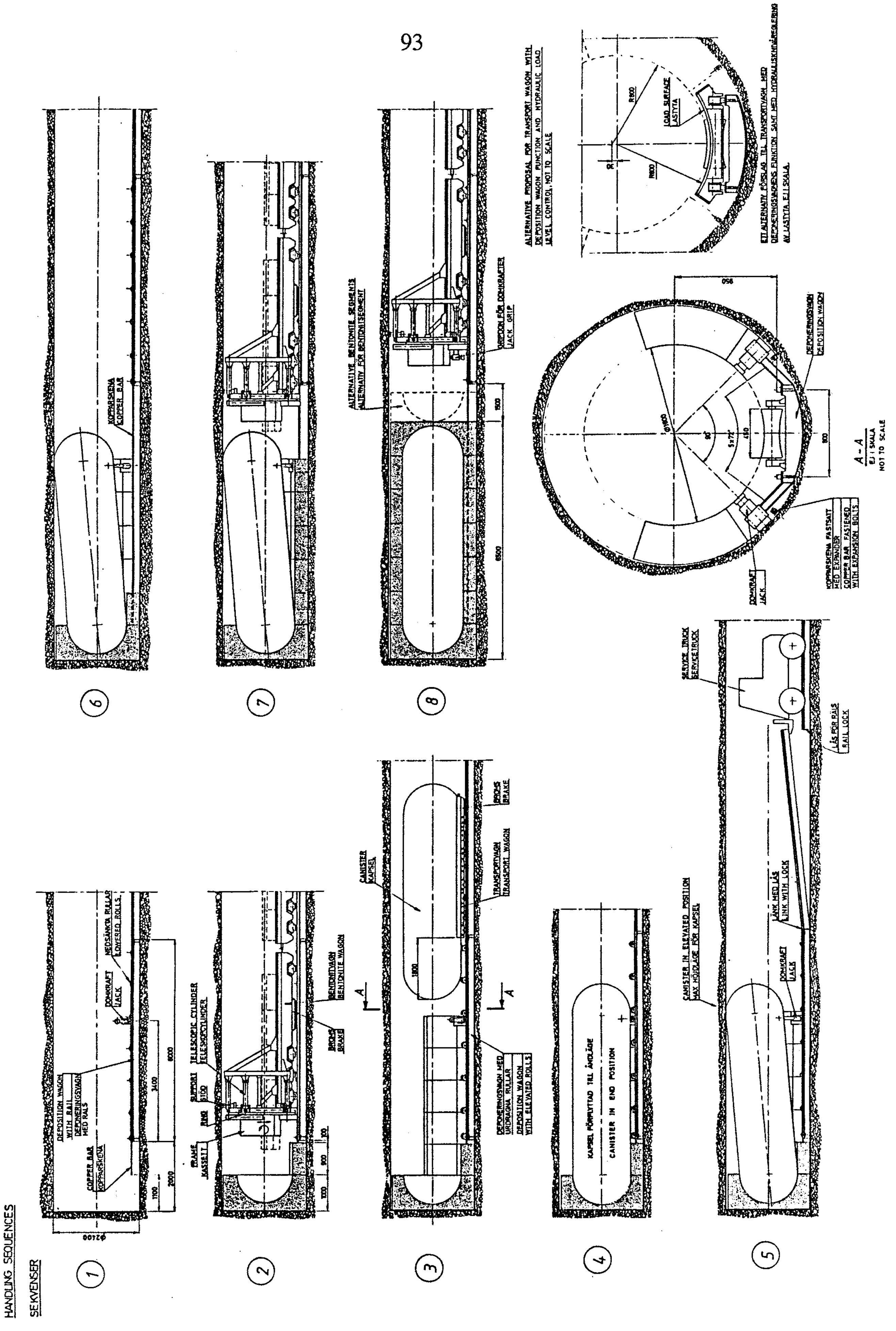

Figure 11-1 Wagon on rails

Wagon on rubber wheels

Clay Technology and the consulting company Scandinavian Bellyloading AB have together suggested a transportation system consisting of wagons on hard rubber wheels in a configuration that fits the circular tunnel, see Figure 11-2.

Different types of vehicles will be used for transportation and handling of the radioactive canister and betonite blocks. Other types of vehicles are suggested to be used during emergencies and inspections. A standard chassi will be used for the different applications in order to save costs and gain flexibility. The chassi is designed with individual power on each wheel placed on a bogie in order to overcome obstacles and run smoothly over an uneven surface. The vehicle will be able to negotiate obstacles of up to 30 mm in size, and can also operate in substantial amounts of water.

The chassi is equipped with the standardized electrohydraulic power unit including a cable drum.

Canisters will be handled by a launching mechanism attatched to the standard chassi. The launching mechanism will be able to carry the canister when transporting it as well as launching it out over the bottom bed of bentonite blocks.

The canister is suspended from suitable straps made of kevlar fibres, and when being transported, the canister is positioned "inside" and above the vehicle. The critical part, the beams of the launching mechanism have been checked for strength and bending. The calculations show a maximum bending of 17 mm in the outer end of the beam when launching which must be considered as acceptable. If less bending should be required, this would be possible to achieve with an even more rigid construction.

The beams are moveable horizontally and are therefore able to launch the canister out over the bed of bentonite. The positioning can be made with great accuracy and precision, as the vehicle itself is supported against the walls of the tunnel by pressure from pistons, and launching is carried out with a hydraulic jack.

A similar type of vehicle is used for transportation of bentonite blocks and handling of the blocks. Two different systems are suggested, one that handles the blocks individually and the other that handles the bentonite in a cassette with about half of the required number of blocks at a time.

The suggested system requires further study among other things with regard to the design of the bogie and the launching mechanism.

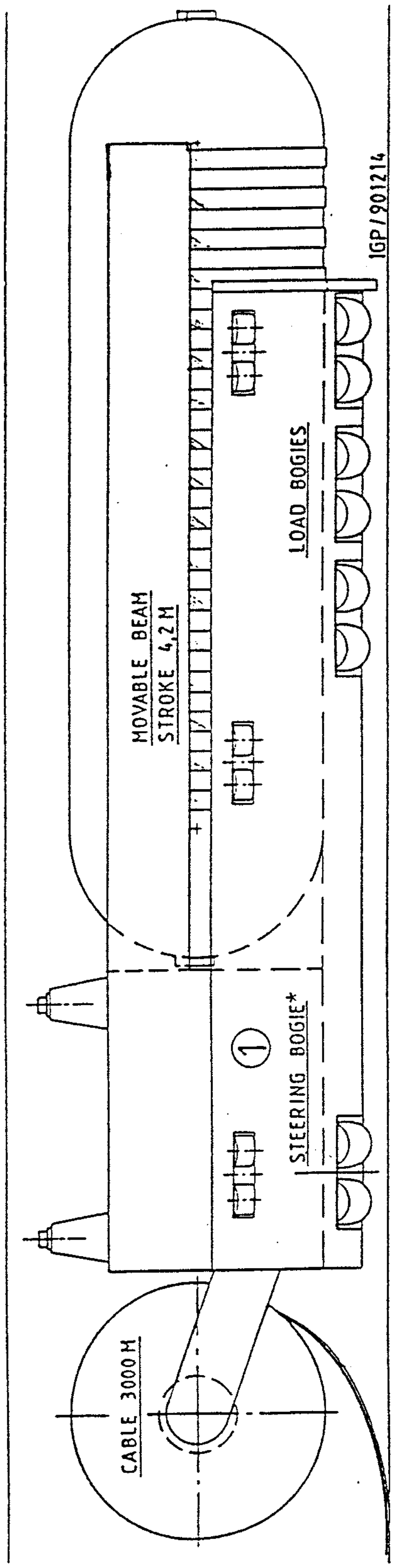

*steering bogie and power unit

Figure 11-2 Wagon on hard rubber wheels

Wagon on airbearing elements

Due to the high load, one alternative instead of using wheels could be airbearing elements. These elements are used in heavy industries in many ways. They can transport everything from engines (one tons) up to large ships (thousands of tons). Above a smooth floor they can move with only a few mm clearance. BT Movite AB in Västerås produces airbearing elements with a capacity of 0.25-40 tons each, which are each 0.2 to 1.2 m in diameter, see Figure 11-3.

When using airbearing elements to transport canisters into the tunnel, the tunnel floor needs to be smoothened by either epoxy or cement slurry, or be covered temporarily by steel sheet or venyl carpet in modules. The elements require a floor-smoothness in the range of a couple of millimeters with no sharp nails. In order to reduce the demanded floor-smoothness foam (water + air) could be used instead of air as the lifting medium.

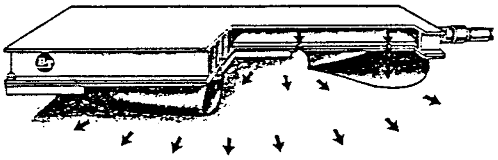

Figure 11-3 Airbearing elements from BT Movite AB

Deployment of maxi canisters

One way of simplifying the deployment of canisters could be as suggested by Clay Technology AB, to push the canister inbedded in bentonite in one package from the surface and down to the deployment position. The idea is to push the canister down on steel skids. In order to reduce the friction, some type of lubricant could be used on the skids. Alternatively, they could be covered with a low friction material.

The negative aspect of this concept is that the high friction (f >1) will demand a large force to push the canister. With the small tolerances between the canister and tunnel wall, the risk of the canister becoming stuck must be judged as fairly high, ant it could be difficult to release it. The demand for straight tunnels minimizes the possibility of adapting the layout to meet geological prerequisities during the construction phase. As a consequence, a special layout of the total repository will be needed, which is presented in Chapter 5 of this report.

Deployment with an "overhead crane"

A system with an overhead crane running on two steel beams on each side of the tunnel wall that moves the canister suspended in straps is also possible. The system implies that the canister is placed in final position on blocks of prepacked bentonite. The surrounding bentonite blocks must afterwards be placed in position with another technique.

However, this system incorporates certain obvious disadvantages. It will be very difficult, and perhaps impossible, to remove the steel beams after deployment. The overhead crane must be designed with a bogie that makes it possible to manage bends in the tunnel. A second system for placing the bentonite blocks around the canister will aslo be needed.

12. FINAL SEALING OF RAMP AND SHAFTS

When the deployment of canisters is finished, the repository will be abandoned and finally sealed off. No analysis of the final sealing is included in this study, but it is assumed that similar methods will be used as for KBS-3. The ramp and shafts will be filled by a mixture of sand and bentonite. The uppermost part of the ramp and shafts should be plugged with materials that offer effective protection against erosion and abrasion.

13. REQUIRED LENGTH OF THE TUNNELS FOR DEPLOYMENT

13.1 Amount of spent fuel for disposal

The spent fuel which is to be disposed of will be temporarily stored for about 40 years in CLAB. The total amount of fuel was in PLAN 91 calculated to be approximately 5900 metric tons of uranium from BWR and approximately 1800 metric tons of uranium from PWR. The remaining heat production after 40 years is approximately 700 W per metric ton of uranium from BWR and approximately 800 W per metric ton of uranium from PWR. In addition about 44 metric tons of uranium from Studsvik, Ågesta etc. will be included in the Swedish disposal program.

Other waste products, such as different metal parts, which in the PLAN reports are assumed to be disposed of at the same site as the spent fuel repository, are not considered in this report.

13.2 Number of canisters

As suggested by ABB, the canister is assumed to have an outer diameter of about 1.6 m and a length of about 5.9 m. Due to the allowed thermal load the contents of each canister is about 24 BWR.

In the PLAN reports the number of canisters are determined by the average thermal load. These canisters are large enough for containing more spent fuel than can be allowed by the thermal load criterion. The volume in the VLH canister is as well larger than is required from a geometrical point of view.

By adopting a temperature restriction in the bentonite of 100°C the calculations have resulted in a thermal load of 2950 W at the time of deposition per canister. The consequent number of canisters is 1876 units. In addition about 20 canisters would be required for the miscellaneous fuel making a total of about 1900 canisters.

13.3 Length of deployment tunnels

It is proposed that the waste should be deployed in three parallel drilled tunnels. The distance between each tunnel will be about 100 m considering the heat flow from the canisters. A distance of only 100 m will be of advantage for any cross tunnel geophysical investigation.

From a cost point of view, it is probably more effective to drill two longer tunnels, but there are certain obvious advantagtes with a three tunnel system such as:

- At least three tunnels is needed in order to get a suitable working cycle and redundancy during deployment of canisters.
- If the drilling of one of the tunnels needs to be abandoned one of the other tunnels could be drilled longer.
- A better geological control of the bedrock surrounding the repository is achieved.

It is suggested that each tunnel will cross one major fracture zone with a width of 50 m. It is assumed that 200 m on both sides will be sealed off by bentonite and not used for deployment. Some minor zones that are also unsuitable for deployment will be sealed off, and about 10 % of the remaining tunnel length has therefore been excluded for deployment. No deployment of canisters will be carried out in bends in the tunnels. Based on this assumption, each tunnel needs to be approximately 4500 m long and a total of 13,5 km of tunnels will be needed for the Swedish high level waste.

14. TIME SCHEDULE FOR CONSTRUCTION AND DEPLOYMENT

As suggested in this report, the radioactive waste will be stored in three long drilled tunnels at a depth of between 500 and 1500 m. As the KBS-3 concept is planned for a depth of 500 m this depth is used for comparison of time and cost data.

A fairly long period will need to elapse between the construction and deployment phase for geological investigations and documentation of the tunnels and to obtain approval for deployment from various authorities. In this report, it is anticipated that this phase will take about 2 years. About one year will also be needed for geological evaluation, complementary geological investigations and detailed design of the repository when the investigation tunnel is ready.

The time needed for deployment will depend on the capacity of the Encapsulation Station. An adequate capacity seems to be 200 canisters per year (one canister per day). This implies that the deployment will take about 10 years.

Time schedule:

Construction

Mobilization, construction of tunnel adit Rig-up of TBM	6 months	
Steep ramp 1:4 and investigation tunnel ø 5 m (100 m/week)	18 months	
Geological evaluation and detailed design of the repository	12 months	
Vertical shafts including installation of equipment, trans-shipment station and tunnel between the ramp and the trans-shipment station	18 months	
Tunnels, 3 x 4000 m (two TBM) (about 100 m/week)	18 months	
Construction works	12 months	7 years

Geological investigations		
Geological investigations and documentation of the rock	24 months	2 years
Deployment		
200 canisters per year	114 months	10 years
Sealing off the repository	12 months	1 years
		20 years

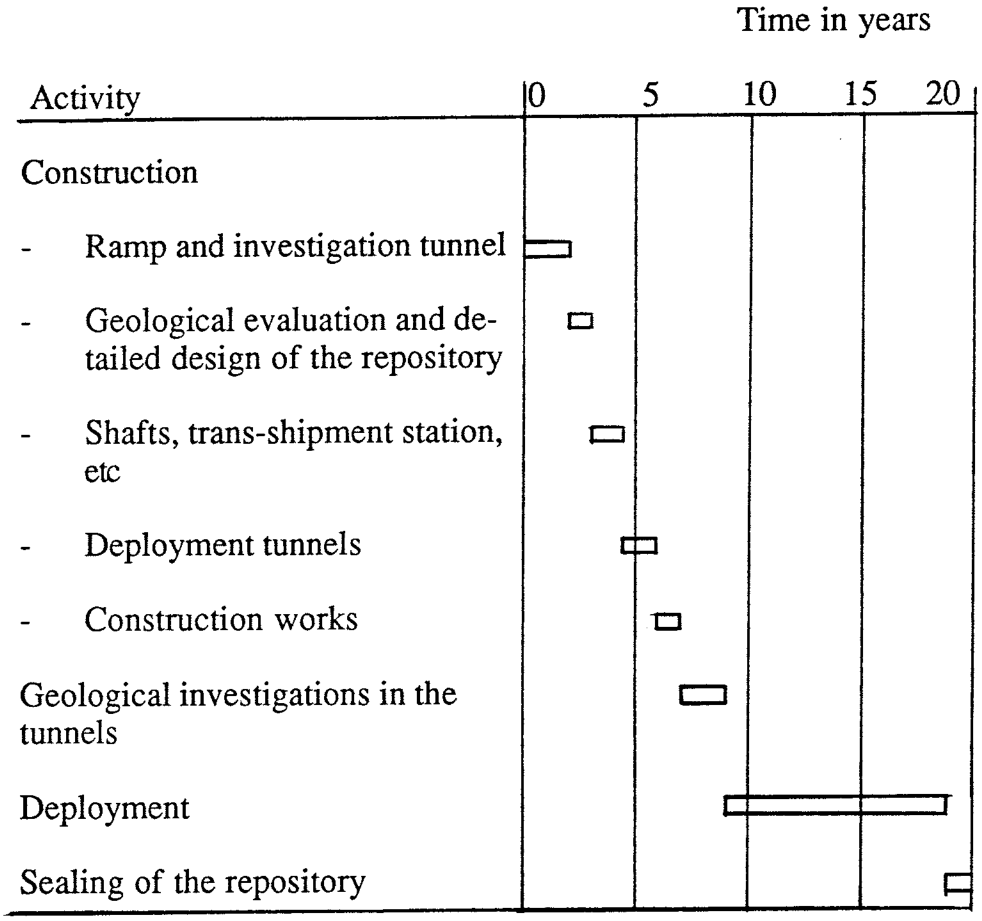

Figure 14-1 Time schedule for deployment of radioactive waste in long drilled tunnels at 500 m depth

The most uncertain part of the time schedule is the time requested for sub-surface geological investigations. The ambition, and thus the time needed will be site specific and also dependent on requests from various authorities.

15. COST CONSIDERATIONS

15.1 VLH alternative

A detailed cost estimate has not been a part of the mission. However, a tentative estimate is presented below for the construction and backfilling of the underground repository. The items considered have been estimated with the same methodology that is used in the annual PLAN reports for calculation of the total cost for the Swedish back-end system.

The calculated costs for the VLH alternative are presented in table 15-1.

Table 15-1 Calculated costs for some items regarding construction and backfilling of a VLH repository. Cost level of January 1991.

OBJECT	VOLUME m^3	COST MSEK	TOTAL MSEK
Rock excavation			
Ramp 5.0 m in diam, incl 1:4	50.000	130	
Investigation drift at 600 m level 5.0 m in diam.	90.000	220	
Raisebored shafts	3.000	30	
Central area sub-surface	50.000	90	
Disposal drifts TBM 2.4 m in diam.	60.000	380	850
Buffer mass			
Compacted bentonite in disposal drifts	40.000	400	400
Sealing			
Ramp 5.0 m	50.000	180	
Investigation drift 5.0 m	90.000	300	
Raise shafts	3.000	10	
Central area	50.000	190	670

Misc construction work		
Road, pavement, concrete, etc	470	470
TOTAL		2.400

15.2 Comparison with reference concept

The PLAN report, which annually presents the costs for the Swedish back-end system, is with respect to disposal of the spent fuel based on the reference concept - the KBS-3 method.

In PLAN 91 volumes of excavated rock in the disposal area, and compacted bentonite blocks for backfilling are included with the numbers shown in Table 15-2. Corresponding values for the VLH design presented in this report are also shown in the table.

Table 15-2 Some repository volumes in PLAN 91 and according to the VLH design in this report.

	KBS-3	**VLH**
Number of canisters	5.300	1.900
Total volume of excavated rock in disposal tunnels m^3	890.000	253.000
Volume of excavated rock in disposal tunnels m^3	-	60.000
Volume of excavated rock in disposal holes m^3	70.000	-
Compacted bentonite surrounding the canisters m^3	53.000	39.000

The costs for KBS-3 items corresponding to the items calculated above for the VLH alternative, see Table 15-1, have in PLAN 91 been presented with a total sum of about MSEK 6.500. This figure as well as the volumes presented in Table 15-2 are, however, not directly comparable with the values for the VLH alternative. Major differences exist in the parameter selections. These differences are:

- Temperature in the bentonite is allowed to raise to only 80°C in PLAN 91 (from 15°C in virgin rock), while the limit is set to 100°C for the VLH in this report.

- The bentonite in PLAN 91 is assumed to have a low water content at disposal meaning a thermal conductivity of 0.75 W/mK, while the bentonite in this report is assumed to be more saturated with a thermal conductivity of 1.5 W/mK.

- The access to the repository level is in PLAN 91 made via shafts, which require among other things, service areas for vehicles etc. under ground. In the VLH design access is assumed via a steep ramp with major maintenance shops on the surface.

A cost calculation of the costs for the reference concept with the same less conservative assumptions as in this report has not been made.

Obviously more fuel could be loaded in each canister of SKB-3 type, if the less conservative assumptions are applied, and thus the costs would decrease. Still, however, the number of KBS-3 canisters would be substantially higher than the number of VLH canisters, which here is calculated to be 1.900 units. By this follows that also the volume of excavated rock will still be substantially higher for KBS-3.

The economical improvement by choosing a steep ramp for access to the repository instead of a shaft system is not in the same order of magnitude as the costs for excavating and backfilling the disposal drifts.

This limited cost analysis clearly indicates lower costs of repository construction and backfilling for the VLH design than for the reference KBS-3 design.

This, however, only reflects a part of the total cost picture. Another major cost item is the encapsulation of the spent fuel. In addition the time of operation is important for the total costs. The VLH concept is considered to produce one canister per day, which also is the case for the KBS-3 concept. As the amount of fuel in each type of canister is quite different, the total time for disposal varies considerably. This effects other parts of the back-end operations as well, such as CLAB and transportation. A complete picture of the cost difference thus will require a wide analysis of the Swedish back-end system. The result of such an analysis can however, be expected to enhance the economical advantage of the VLH alternative as the factors with a major impact on the total costs are favourable for the VLH design.

REFERENCES

Bannmann, J. Auftahrung geneigter Grussenbane mit Teilschnitt und mit Vollschnitt Vortiebsmaschinen. Glück auf 123 (1987) nr 8.

Börgesson L., Hökmark H. and Karnland O. (1988) - Rheological properties of sodium smectite clay. SKB Technical Report 88-26.

Börgesson L. (1990) - Interim report on the laboratory and theoretical work in modelling the drained and undrained behaviour of buffer materials. SKB Technical Report 90-45.

Good Progress at Erfdeel. Eng. J. V 93, nr 3 1984 SAfr Min.

Hall, G.C. Construction and utilisation of the Olympic Dam Service Decline. The Aus IMM Bull and Proceedings Vol 293, no 7, Okt 1988.

Holmgren, F. Bandtunnel i Aitik, BK Diskussionsmöte BK-90.

Hökmark H. (1991) - VLH - Near field rock behavior. Clay Technology Internal Report.

Koslar, W. Shaft Construction Project in Korea. Glüchauf Transl. v 123 nr 8 apr 23 1987, 20.

New TBM unveiled Mining Magazine - March 1990. Kennedy, A. Kaukberg Goes Electric. Mining Magazine April 1990.

PLAN 91. Kostnader för kärnkraftens radioaktiva restprodukter, Juni 1991. Svensk Kärnbränslehantering AB

Pusch R., Börgesson L. and Ramqvist G. (1985) - Final report of the buffer mass test - volume 2: Test results. Stripa Project Technical Report 85-12.

Pusch R. and Karnland O. (1990) - Longevity of momtmorillonite clay under repository related conditions. SKB Technical Report 90-44.

Raine, A.G. Large Diameter Mine shaft construction using a rodless boring machine. Mining Technology, May 1985.

Robbins, Folders, 1986.

Scales, Marilyn. Macassa Shaft cuts production costs 26 percent. Can. Min. J. v 104 nr 9 sept 1983.

Särkke, P. Naturgaslagring i Finland. BK Diskussionsmöte BK-90.

Thümmler K-W, Veeck-Krämer B East Driefontein Gold Mine.
Erz Metall 39 (1986) nr 7/8

Tollerup, L. The Saltsjötunnel, A 7.5 km TBM-tunnel under the City of Stockholm, an energy/environmental project in hard granite. Proc. UC 89, April 89.

Woods, B.M. Future Shaft Sinking Techniques. The Mining Eng. Aug 1988.

List of SKB reports

Annual Reports

1977-78
TR 121
KBS Technical Reports 1 – 120
Summaries
Stockholm, May 1979

1979
TR 79-28
The KBS Annual Report 1979
KBS Technical Reports 79-01 – 79-27
Summaries
Stockholm, March 1980

1980
TR 80-26
The KBS Annual Report 1980
KBS Technical Reports 80-01 – 80-25
Summaries
Stockholm, March 1981

1981
TR 81-17
The KBS Annual Report 1981
KBS Technical Reports 81-01 – 81-16
Summaries
Stockholm, April 1982

1982
TR 82-28
The KBS Annual Report 1982
KBS Technical Reports 82-01 – 82-27
Summaries
Stockholm, July 1983

1983
TR 83-77
The KBS Annual Report 1983
KBS Technical Reports 83-01 – 83-76
Summaries
Stockholm, June 1984

1984
TR 85-01
Annual Research and Development Report 1984
Including Summaries of Technical Reports Issued during 1984. (Technical Reports 84-01 – 84-19)
Stockholm, June 1985

1985
TR 85-20
Annual Research and Development Report 1985
Including Summaries of Technical Reports Issued during 1985. (Technical Reports 85-01 – 85-19)
Stockholm, May 1986

1986
TR 86-31
SKB Annual Report 1986
Including Summaries of Technical Reports Issued during 1986
Stockholm, May 1987

1987
TR 87-33
SKB Annual Report 1987
Including Summaries of Technical Reports Issued during 1987
Stockholm, May 1988

1988
TR 88-32
SKB Annual Report 1988
Including Summaries of Technical Reports Issued during 1988
Stockholm, May 1989

1989
TR 89-40
SKB Annual Report 1989
Including Summaries of Technical Reports Issued during 1989
Stockholm, May 1990

Technical Reports
List of SKB Technical Reports 1991

TR 91-01
Description of geological data in SKB's database GEOTAB
Version 2
Stefan Sehlstedt, Tomas Stark
SGAB, Luleå
January 1991

TR 91-02
Description of geophysical data in SKB database GEOTAB
Version 2
Stefan Sehlstedt
SGAB, Luleå
January 1991

TR 91-03
1. The application of PIE techniques to the study of the corrosion of spent oxide fuel in deep-rock ground waters
2. Spent fuel degradation
R S Forsyth
Studsvik Nuclear
January 1991

TR 91-04
Plutonium solubilities
I Puigdomènech[1], J Bruno[2]
[1]Enviromental Services, Studsvik Nuclear, Nyköping, Sweden
[2]MBT Tecnologia Ambiental, CENT, Cerdanyola, Spain
February 1991

TR 91-05
Description of tracer data in the SKB database GEOTAB
SGAB, Luleå
April, 1991

TR 91-06
Description of background data in the SKB database GEOTAB
Version 2
Ebbe Eriksson, Stefan Sehlstedt
SGAB, Luleå
March 1991

TR 91-07
Description of hydrogeological data in the SKB's database GEOTAB
Version 2
Margareta Gerlach[1], Bengt Gentzschein[2]
[1]SGAB, Luleå
[2]SGAB, Uppsala
April 1991

TR 91-08
Overview of geologic and geohydrologic conditions at the Finnsjön site and its surroundings
Kaj Ahlbom[1], Sven Tirén[2]
[1]Conterra AB
[2]Sveriges Geologiska AB
January 1991

TR 91-09
Long term sampling and measuring program. Joint report for 1987, 1988 and 1989. Within the project: Fallout studies in the Gideå and Finnsjö areas after the Chernobyl accident in 1986
Thomas Ittner
SGAB, Uppsala
December 1990

TR 91-10
Sealing of rock joints by induced calcite precipitation. A case study from Bergeforsen hydro power plant
Eva Hakami[1], Anders Ekstav[2], Ulf Qvarfort[2]
[1]Vattenfall HydroPower AB
[2]Golder Geosystem AB
January 1991

TR 91-11
Impact from the disturbed zone on nuclide migration – a radioactive waste repository study
Akke Bengtsson[1], Bertil Grundfelt[1],
Anders Markström[1], Anders Rasmuson[2]
[1]KEMAKTA Konsult AB
[2]Chalmers Institute of Technology
January 1991

TR 91-12
Numerical groundwater flow calculations at the Finnsjön site
Björn Lindbom, Anders Boghammar,
Hans Lindberg, Jan Bjelkås
KEMAKTA Consultants Co, Stockholm
February 1991

TR 91-13
Discrete fracture modelling of the Finnsjön rock mass
Phase 1 feasibility study
J E Geier, C-L Axelsson
Golder Geosystem AB, Uppsala
March 1991

TR 91-14
Channel widths
Kai Palmqvist, Marianne Lindström
BERGAB-Berggeologiska Undersökningar AB
February 1991

TR 91-15
Uraninite alteration in an oxidizing environment and its relevance to the disposal of spent nuclear fuel
Robert Finch, Rodney Ewing
Department of Geology, University of New Mexico
December 1990

TR 91-16
Porosity, sorption and diffusivity data compiled for the SKB 91 study
Fredrik Brandberg, Kristina Skagius
Kemakta Consultants Co, Stockholm
April 1991

TR 91-17
Seismically deformed sediments in the Lansjärv area, Northern Sweden
Robert Lagerbäck
May 1991

TR 91-18
Numerical inversion of Laplace transforms using integration and convergence acceleration
Sven-Åke Gustafson
Rogaland University, Stavanger, Norway
May 1991

TR 91-19
NEAR21 - A near field radionuclide migration code for use with the PROPER package
Sven Norman[1], Nils Kjellbert[2]
[1]Starprog AB
[2]SKB AB
April 1991

TR 91-20
Äspö Hard Rock Laboratory. Overview of the investigations 1986-1990
R Stanfors, M Erlström, I Markström
June 1991

TR 91-21
Äspö Hard Rock Laboratory. Field investigation methodology and instruments used in the pre-investigation phase, 1986-1990
K-E Almén, O Zellman
June 1991

TR 91-22
Äspö Hard Rock Laboratory. Evaluation and conceptual modelling based on the pre-investigations 1986-1990
P Wikberg, G Gustafson, I Rhén, R Stanfors
June 1991

TR 91-23
Äspö Hard Rock Laboratory. Predictions prior to excavation and the process of their validation
Gunnar Gustafson, Magnus Liedholm, Ingvar Rhén, Roy Stanfors, Peter Wikberg
June 1991

TR 91-24
Hydrogeological conditions in the Finnsjön area. Compilation of data and conceptual model
Jan-Erik Andersson, Rune Nordqvist, Göran Nyberg, John Smellie, Sven Tirén
February 1991

TR 91-25
The role of the disturbed rock zone in radioactive waste repository safety and performance assessment. A topical discussion and international overview.
Anders Winberg
June 1991

TR 91-26
Testing of parameter averaging techniques for far-field migration calculations using FARF31 with varying velocity.
Akke Bengtsson[1], Anders Boghammar[1], Bertil Grundfelt[1], Anders Rasmuson[2]
[1]KEMAKTA Consultants Co
[2]Chalmers Institute of Technology

TR 91-27
Verification of HYDRASTAR. A code for stochastic continuum simulation of groundwater flow
Sven Norman
Starprog AB
July 1991

TR 91-28
Radionuclide content in surface and groundwater transformed into breakthrough curves. A Chernobyl fallout study in an forested area in Northern Sweden
Thomas Ittner, Erik Gustafsson, Rune Nordqvist
SGAB, Uppsala
June 1991

TR 91-29
Soil map, area and volume calculations in Orrmyrberget catchment basin at Gideå, Northern Sweden
Thomas Ittner, P-T Tammela, Erik Gustafsson
SGAB, Uppsala
June 1991

TR 91-30
A resistance network model for radionuclide transport into the near field surrounding a repository for nuclear waste (SKB, Near Field Model 91)
Lennart Nilsson, Luis Moreno, Ivars Neretnieks, Leonardo Romero
Department of Chemical Engineering, Royal Institute of Technology, Stockholm
June 1991

TR 91-31
Near field studies within the SKB91 project
Hans Widén, Akke Bengtsson, Bertil Grundfelt
Kemakta Consultants AB, Stockholm
June 1991

TR 91-32
SKB/TVO Ice age scenario
Kaj Ahlbom[1], Timo Äikäs[2], Lars O. Ericsson[3]
[1]Conterra AB
[2]Teollisuuden Voima Oy (TVO)
[3]Svensk Kärnbränslehantering AB (SKB)
June 1991

TR 91-33
Transient nuclide release through the bentonite barrier - SKB91
Akke Bengtsson, Hans Widén
Kemakta Konsult AB
May 1991

TR 91-34
SIMFUEL dissolution studies in granitic groundwater
I Casas[1], A Sandino[2], M S Caceci[1], J Bruno[1],
K Ollila[3]
[1]MBT Tecnologia Ambiental, CENT, Cerdanyola, Spain
[2]KTH, Dpt. of Inorganic Chemistry, Stockholm, Sweden
[3]VTT, Tech. Res. Center of Finland, Espoo, Finland
September 1991